HIGHLAND

Features:

Size (mm): 225Øx99

Maintenance-Free Ball Bearings

Plastic Impeller

Insulation Class B, IP54

Thermally Protected (Auto Restart)

230 VAC

Highland Centrifugal AC Fan

Part Number: HIG-C225RP230L02I54L

Product Description

Highland 225mm x 225mm Round 99mm Thick Centrifugal Fan with Plastic Impeller, 230 VAC, Low Speed, AC Induction Capacitor Motor, IP54 Protection with Lead Wires

General Specification

Fan Type	Centrifugal
Operating Voltage	230 VAC
Hz	50/60
Speed (RPM)	1400/1600
Airflow - CFM	347/405
Airflow - cubic m^3/hr	589.557/688.099
Airflow - m^3/s	0.164/0.191
Pressure - mmH^20	14/20
Pressure - $inchH^20$	0.551/0.787
Pressure - Pa	137.293/196.133
Noise dB	59/61
Operating Temperature	-20℃ to +70℃
Expected Life (H)	70K @ 25 / 45K @ 40 Degrees Centigrade
Weight (g)	1985
Tariff Code	8414.59.6590

Mechanical Specifications

Fan Size	225Øx99
Frame Material	Aluminium
Impeller	Plastic Impeller

Approvals and Certificates

Approvals	CE	Y
	TUV	Y
	RoSH	Y
	UL	Y

Airflow Graph

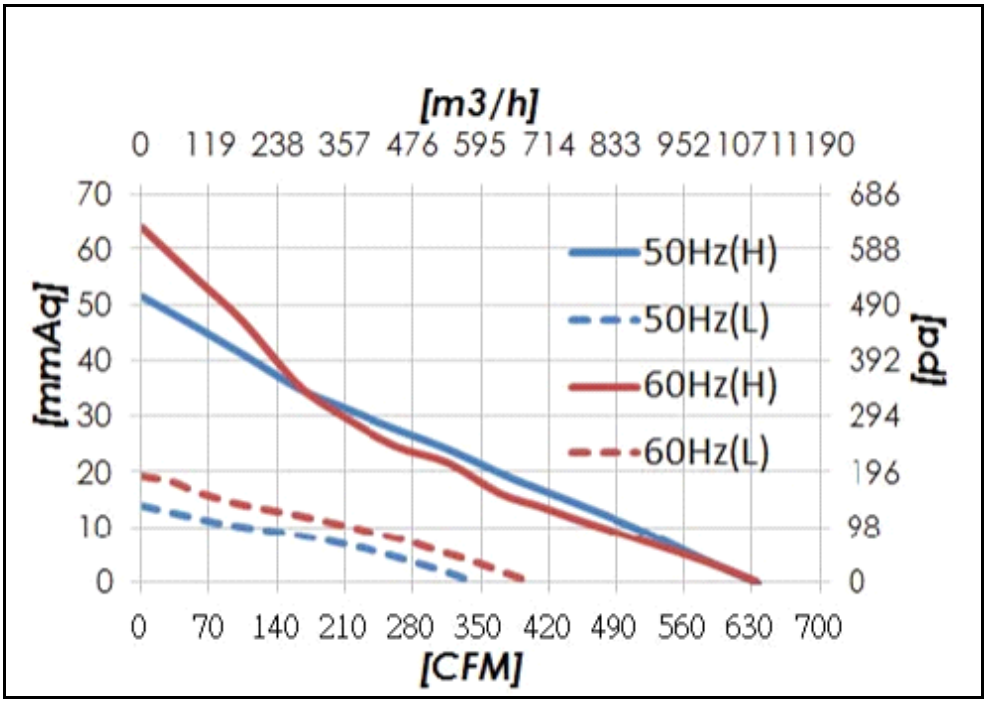

Dimensional Drawing (mm)

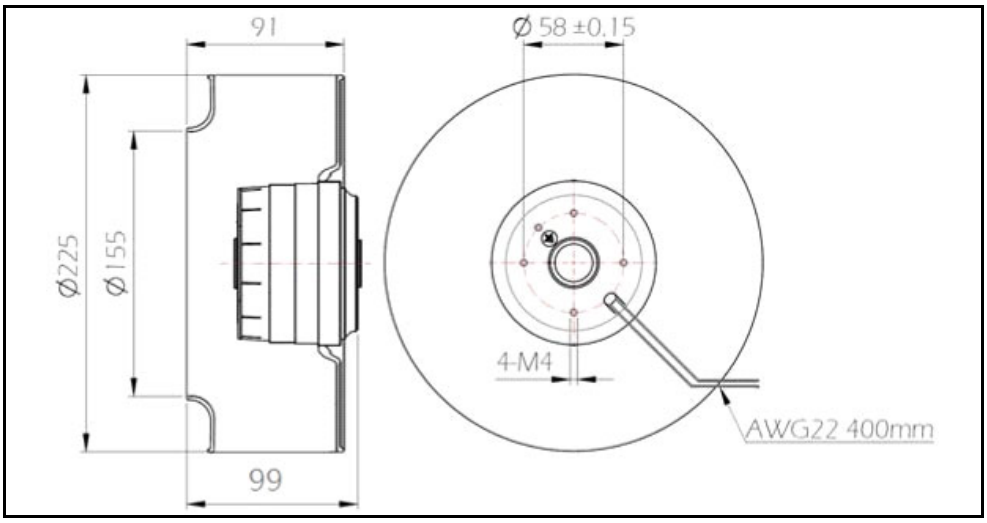

Similar Products

Product	Size	Impeller Material	Speed	Noise	Weight
HIG-C225RP115H02I54L	225Øx99	Plastic Impeller	2500/2500	70/72	1985
HIG-C225RP115L02I54L	225Øx99	Plastic Impeller	1400/1600	59/61	1985
HIG-C225RP230H02I54L	225Øx99				
N/A					
N/A					

Finger Guard Accessory's

Product	Guard Type	Fan Size	Weight (g)
N/A			
N/A			
N/A			

Additional Information

Box Quantity:	5
Weight Per Box:	9.925 KG
Size Per Box:	63×31×31