HIGHLAND

Features:

Size (mm): 220Øx76

Maintenance-Free Ball Bearings

Plastic Impeller

Insulation Class B, IP54

Thermally Protected (Auto Restart)

115 VAC

Highland Centrifugal AC Fan

Part Number: HIG-C220RP115H06I54L

Product Description

Highland ϕ220mm Round 76mm Thick Centrifugal Fan with Plastic Impeller, 115 VAC, High Speed, AC Induction Capacitor Motor, IP54 Protection with Lead Wires

General Specification

Fan Type	Centrifugal
Operating Voltage	115 VAC
Hz	50/60
Speed (RPM)	2650/2950
Airflow - CFM	490/550
Airflow - cubic m^3/hr	832.515/934.456
Airflow - m^3/s	0.231/0.26
Pressure - mmH^20	40/55
Pressure - $inchH^20$	1.575/2.165
Pressure - Pa	392.267/539.367
Noise dB	75/78
Operating Temperature	-20℃ to +70℃
Expected Life (H)	70K @ 25 / 45K @ 40 Degrees Centigrade
Weight (g)	1980
Tariff Code	8414.59.6590

Mechanical Specifications

Fan Size	220Øx76
Frame Material	Aluminium
Impeller	Plastic Impeller

Approvals and Certificates

Approvals	CE	Y
	TUV	Y
	RoSH	Y
	UL	Y

Airflow Graph

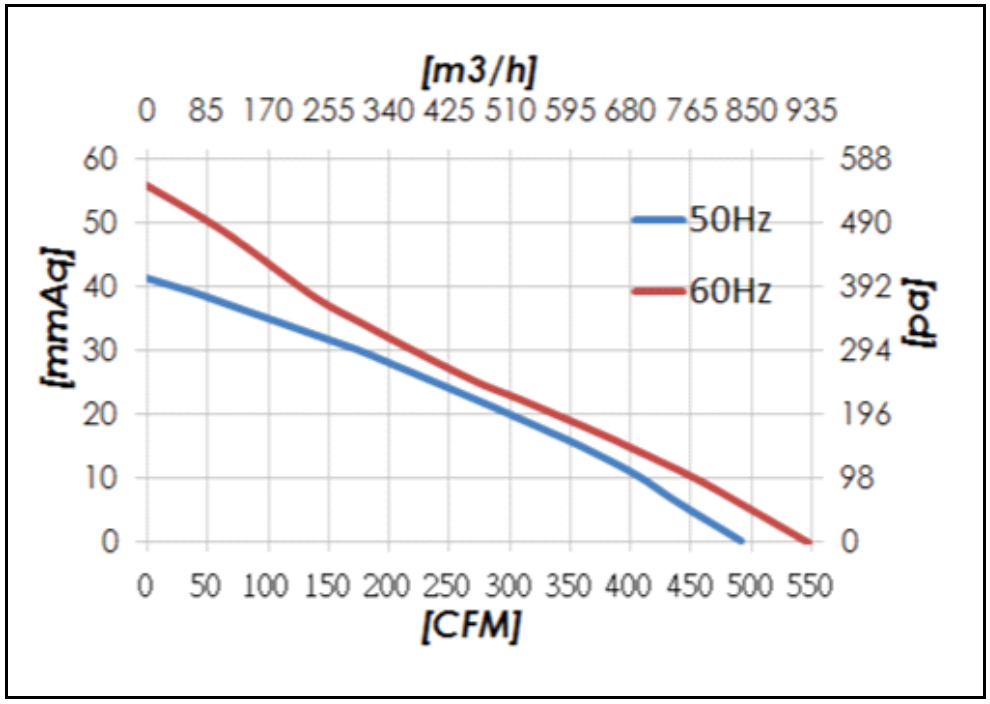

Dimensional Drawing (mm)

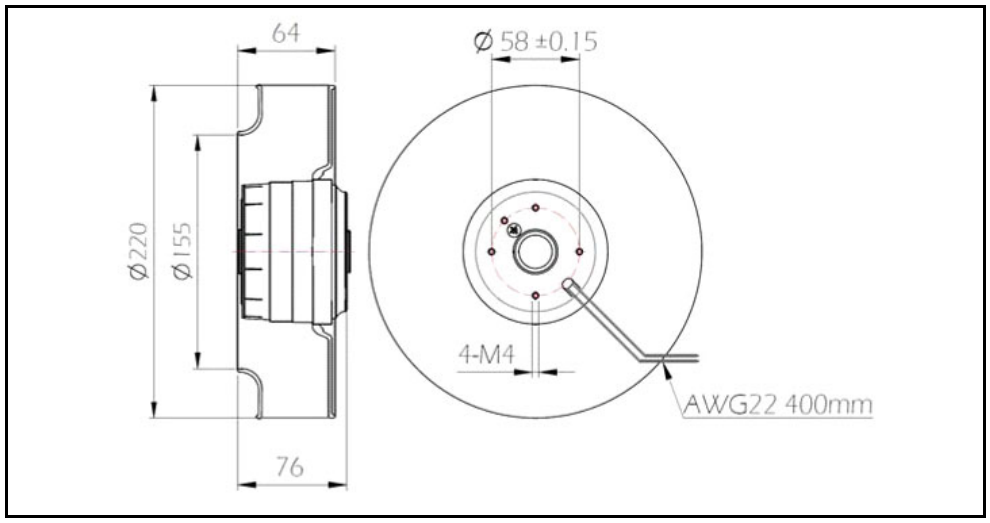

Similar Products

Product	Size	Impeller Material	Speed	Noise	Weight
HIG-C220RP230H06I54L	220Øx76	Plastic Impeller	2650/2950	75/78	1980
N/A					
N/A					
N/A					
N/A					

Finger Guard Accessory's

Product	Guard Type	Fan Size	Weight (g)
N/A			
N/A			
N/A			

Additional Information

Box Quantity:	5
Weight Per Box:	9.9 KG
Size Per Box:	41×28×29