HIGHLAND

Features:

Size (mm): 190Øx67

Maintenance-Free Ball Bearings

Plastic Impeller

Insulation Class B, IP54

Thermally Protected (Auto Restart)

230 VAC

Highland Centrifugal AC Fan

Part Number: HIG-C190RP230M10I54L

Product Description

Highland ϕ190mm Round 67mm Thick Centrifugal Fan with Plastic Impeller, 230 VAC, Medium Speed, AC Induction Capacitor Motor, IP54 Protection with Lead Wires

General Specification

Fan Type	Centrifugal
Operating Voltage	230 VAC
Hz	50/60
Speed (RPM)	2000/1600
Airflow - CFM	256/224
Airflow - cubic m^3/hr	434.947/380.578
Airflow - m^3/s	0.121/0.106
Pressure - mmH^20	28/28
Pressure - $inchH^20$	1.102/1.102
Pressure - Pa	274.587/274.587
Noise dB	61/59
Operating Temperature	-20℃ to +70℃
Expected Life (H)	70K @ 25 / 45K @ 40 Degrees Centigrade
Weight (g)	1820
Tariff Code	8414.59.6590

Mechanical Specifications

Fan Size	190Øx67
Frame Material	Aluminium
Impeller	Plastic Impeller

Approvals and Certificates

Approvals	CE	Y
	TUV	Y
	RoSH	Y
	UL	Y

Airflow Graph

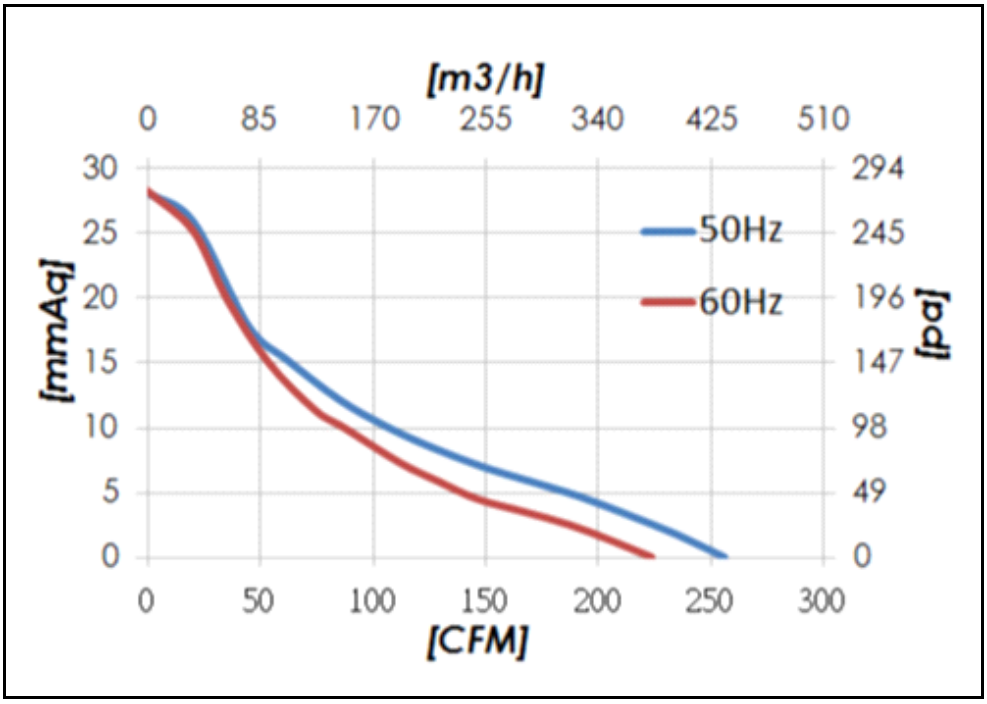

Dimensional Drawing (mm)

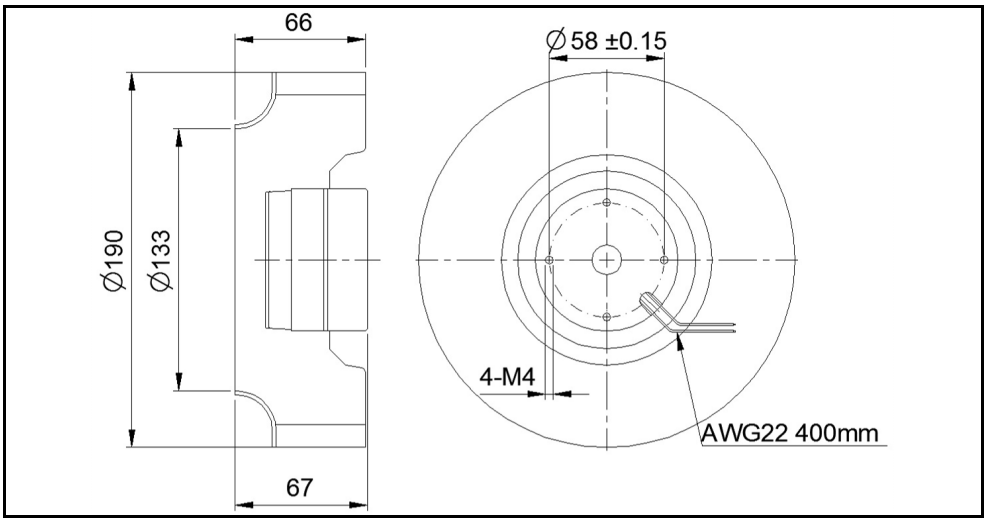

Similar Products

Product	Size	Impeller Material	Speed	Noise	Weight
HIG-C190RP115M10I54L	190Øx67	Plastic Impeller	2000/1600	61/59	1820
N/A					
N/A					
N/A					
N/A					

Finger Guard Accessory's

Product	Guard Type	Fan Size	Weight (g)
N/A			
N/A			
N/A			

Additional Information

Box Quantity:	8
Weight Per Box:	14.56 KG
Size Per Box:	0