HIGHLAND

Features:

Size (mm): 175Øx69

Maintenance-Free Ball Bearings

Plastic Impeller

Insulation Class B, IP54

Thermally Protected (Auto Restart)

230 VAC

Highland Centrifugal AC Fan

Part Number: HIG-C175RP230H09I54L

Product Description

Highland ϕ175mm Round 69mm Thick Centrifugal Fan with Plastic Impeller, 230 VAC, High Speed, AC Induction Capacitor Motor, IP54 Protection with Lead Wires

General Specification

Fan Type	Centrifugal
Operating Voltage	230 VAC
Hz	50/60
Speed (RPM)	2600/2900
Airflow - CFM	294/313
Airflow - cubic m^3/hr	499.509/531.79
Airflow - m^3/s	0.139/0.148
Pressure - mmH^20	28/37
Pressure - $inchH^20$	1.102/1.457
Pressure - Pa	274.587/362.847
Noise dB	66/68
Operating Temperature	-20℃ to +70℃
Expected Life (H)	70K @ 25 / 45K @ 40 Degrees Centigrade
Weight (g)	870
Tariff Code	8414.59.6590

Mechanical Specifications

Fan Size	175Øx69
Frame Material	Aluminium
Impeller	Plastic Impeller

Approvals and Certificates

Approvals	CE	Y
	TUV	Y
	RoSH	Y
	UL	Y

Airflow Graph

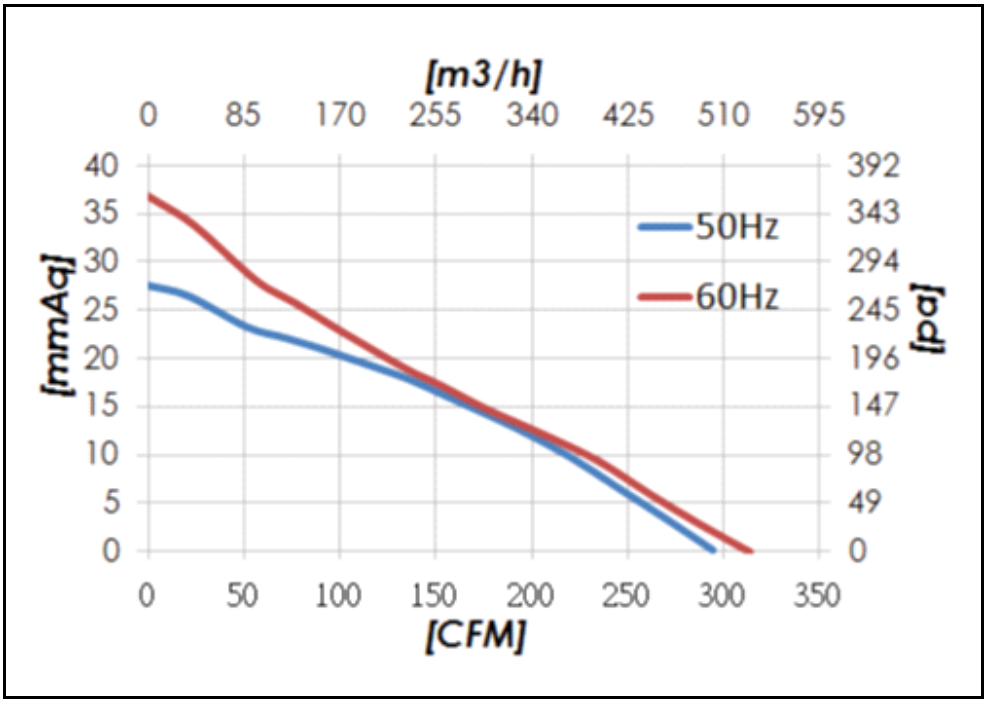

Dimensional Drawing (mm)

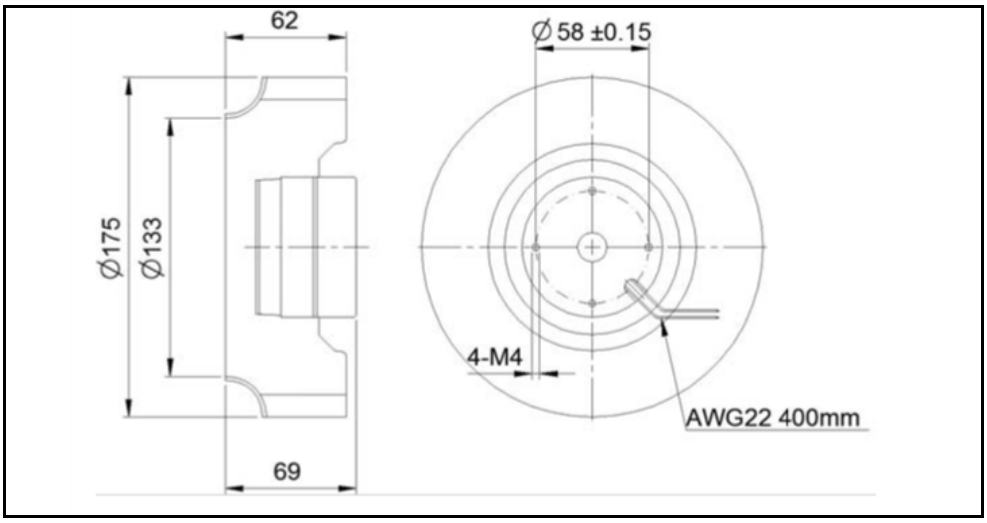

Similar Products

Product	Size	Impeller Material	Speed	Noise	Weight
HIG-C175RP115H09I54L	175Øx69	Plastic Impeller	2600/2900	66/68	870
N/A					
N/A					
N/A					
N/A					

Finger Guard Accessory's

Product	Guard Type	Fan Size	Weight (g)
N/A			
N/A			
N/A			

Additional Information

Box Quantity:	8
Weight Per Box:	6.96 KG
Size Per Box:	42×43×19