HIGHLAND

Features:

Size (mm): 280 x 280 x 80

Maintenance-Free Ball Bearings

Aluminum Housing, Steel Impeller

Insulation Class B, IP54

Thermally Protected (Auto Restart)

230 VAC

Highland Axial AC Fan

Part Number: HIG-A280SM230H05I54K

Product Description

Highland 280mm x 280mm Square 80mm Thick Axial Fan with Steel (Metal) Impeller, 230 VAC, High Speed, AC Induction Capacitor Motor, IP54 Protection with Terminal Block

General Specification

Fan Type	Axial
Operating Voltage	230 VAC
Hz	50/60
Speed (RPM)	2650/2900
Airflow - CFM	1090/1200
Airflow - cubic m^3/hr	1851.922/2038.813
Airflow - m^3/s	0.514/0.566
Pressure - mmH^20	24.5/20.5
Pressure - $inchH^20$	0.965/0.807
Pressure - Pa	240.263/201.037
Noise dB	70/73
Operating Temperature	-20℃ to +70℃
Expected Life (H)	70K @ 25 / 45K @ 40 Degrees Centigrade
Weight (g)	3150
Tariff Code	8414.59.6590

Mechanical Specifications

Fan Size	280 x 280 x 80
Frame Material	Aluminium
Impeller	Steel (Metal) Impeller

Approvals and Certificates

Approvals	CE	Y
	TUV	Y
	RoSH	Y
	UL	Y

Airflow Graph

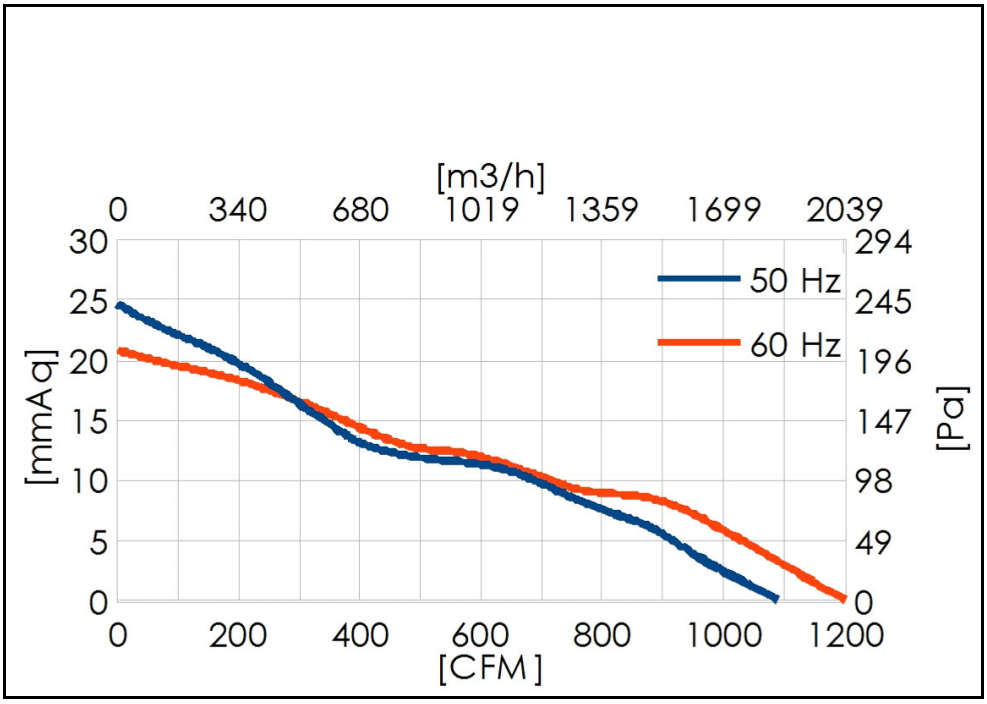

Dimensional Drawing (mm)

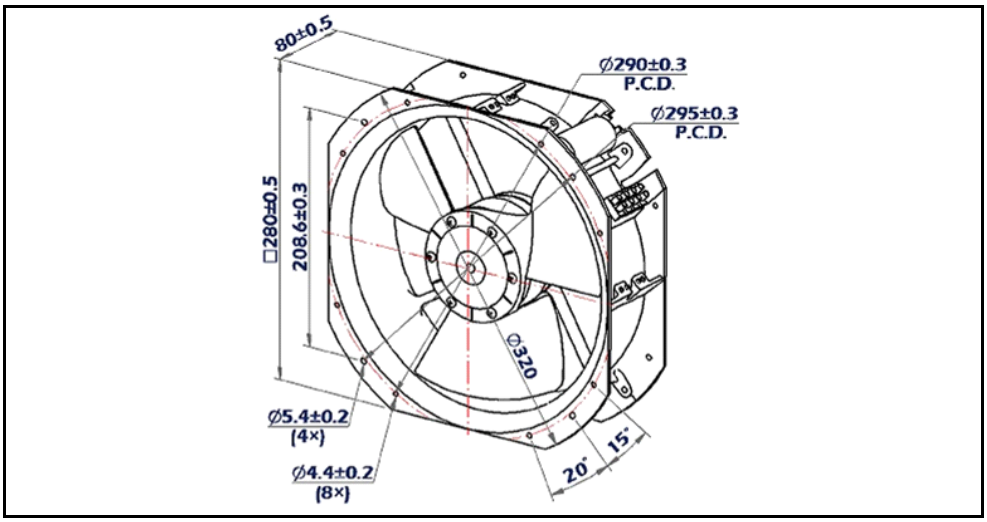

Similar Products

Product	Size	Impeller Material	Speed	Noise	Weight
HIG-A280SM115H05I54K	280 x 280 x 80	Steel (Metal) Impeller	2650/2900	70/73	3150
HIG-A280SM230H05I54K.D	280 x 280 x 80	Steel (Metal) Impeller	2650/2900	70/73	3150
N/A					
N/A					
N/A					

Finger Guard Accessory's

Product	Guard Type	Fan Size	Weight (g)
N/A			
N/A			
N/A			

Additional Information

Box Quantity:	6
Weight Per Box:	18.9 KG
Size Per Box:	63×31×31