HIGHLAND

Features:

Size (mm): 254Øx89

Maintenance-Free Ball Bearings

Aluminum Housing, Steel Impeller

Insulation Class B, IP54

Thermally Protected (Auto Restart)

115 VAC

Highland Axial AC Fan

Part Number: HIG-A254RM115L04I54T

Product Description

Highland ϕ254mm Round 89mm Thick Axial Fan with Steel (Metal) Impeller, 115 VAC, Low Speed, AC Induction Capacitor Motor, IP54 Protection with Terminals

General Specification

Fan Type	Axial
Operating Voltage	115 VAC
Hz	50/60
Speed (RPM)	1400/1650
Airflow - CFM	370/440
Airflow - cubic m^3/hr	628.634/747.565
Airflow - m^3/s	0.175/0.208
Pressure - mmH^20	6.3/7.9
Pressure - $inchH^20$	0.248/0.311
Pressure - Pa	61.782/77.473
Noise dB	52/54
Operating Temperature	-20℃ to +70℃
Expected Life (H)	70K @ 25 / 45K @ 40 Degrees Centigrade
Weight (g)	2750
Tariff Code	8414.59.6590

Mechanical Specifications

Fan Size	254Øx89
Frame Material	Aluminium
Impeller	Steel (Metal) Impeller

Approvals and Certificates

Approvals	CE	Y
	TUV	Y
	RoSH	Y
	UL	Y

Airflow Graph

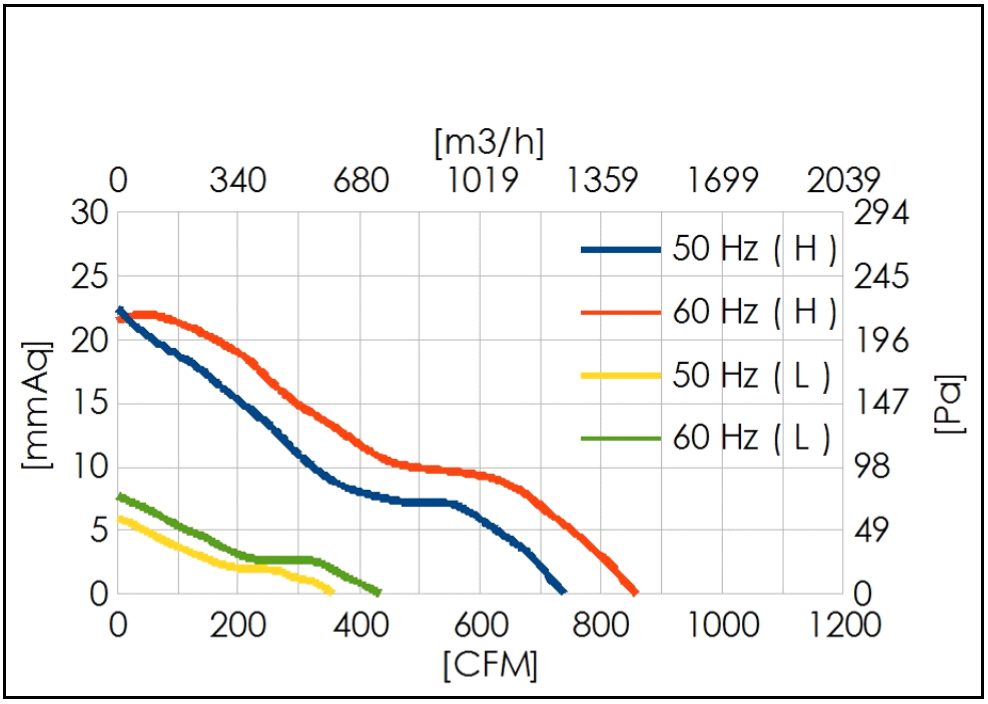

Dimensional Drawing (mm)

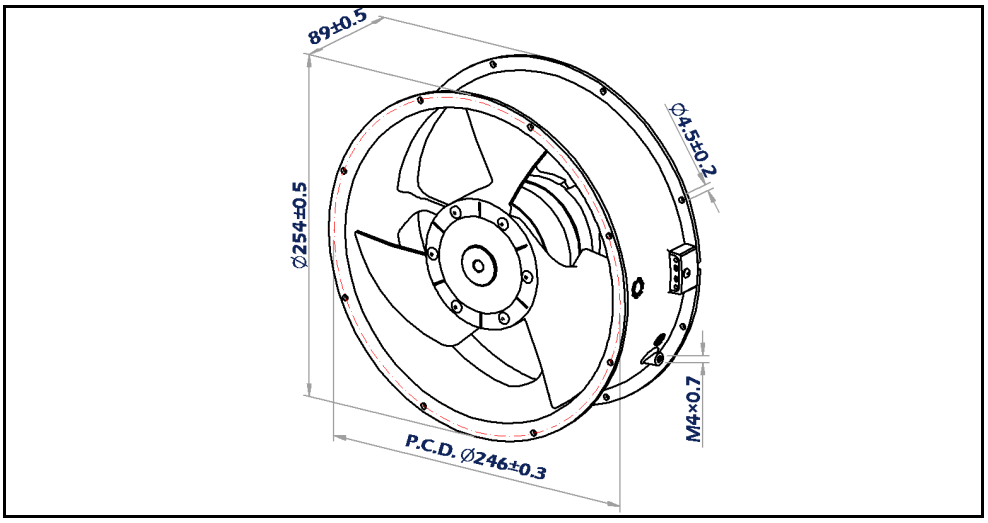

Similar Products

Product	Size	Impeller Material	Speed	Noise	Weight
HIG-A254RM115L04I54L	254Øx89	Steel (Metal) Impeller	1400/1650	52/54	2750
HIG-A254RM115H04I54T	254Øx89	Steel (Metal) Impeller	2800/3200	66/68	2750
HIG-A254RM230H04I54T	254Øx89				
HIG-A254RM230L04I54L	254Øx89				
HIG-A254RM230L04I54T	254Øx89				

Finger Guard Accessory's

Product	Guard Type	Fan Size	Weight (g)
N/A			
N/A			
N/A			

Additional Information

Box Quantity:	6
Weight Per Box:	16.5 KG
Size Per Box:	63×31×31