HIGHLAND

Features:

Size (mm): 225 x 225 x 80

Maintenance-Free Ball Bearings

Aluminum Housing, Steel Impeller

Insulation Class B, IP54

Thermally Protected (Auto Restart)

230 VAC

Highland Axial AC Fan

Part Number: HIG-A225SM230H05I54K

Product Description

Highland 225mm x 225mm Square 80mm Thick Axial Fan with Steel (Metal) Impeller, 230 VAC, High Speed, AC Induction Capacitor Motor, IP54 Protection with Terminal Block

General Specification

Fan Type	Axial
Operating Voltage	230 VAC
Hz	50/60
Speed (RPM)	2800/3200
Airflow - CFM	580/670
Airflow - cubic m^3/hr	985.426/1138.337
Airflow - m^3/s	0.274/0.316
Pressure - mmH^20	23.5/20.5
Pressure - $inchH^20$	0.925/0.807
Pressure - Pa	230.457/201.037
Noise dB	68/71
Operating Temperature	-20℃ to +70℃
Expected Life (H)	70K @ 25 / 45K @ 40 Degrees Centigrade
Weight (g)	2750
Tariff Code	8414.59.6590

Mechanical Specifications

Fan Size	225 x 225 x 80
Frame Material	Aluminium
Impeller	Steel (Metal) Impeller

Approvals and Certificates

Approvals	CE	Y
	TUV	Y
	RoSH	Y
	UL	Y

Airflow Graph

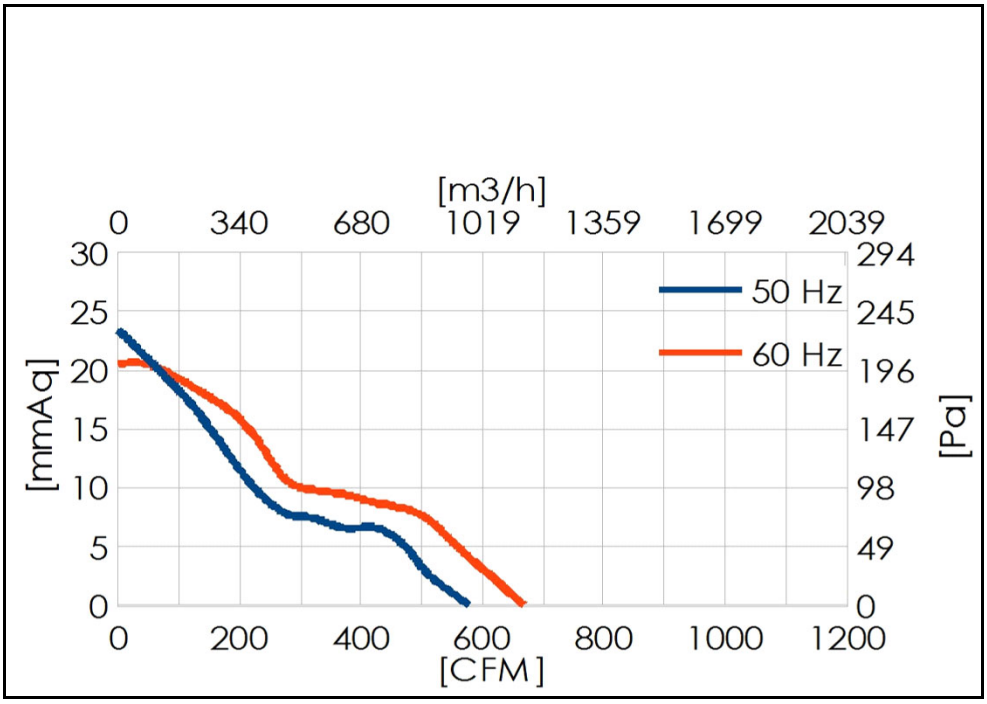

Dimensional Drawing (mm)

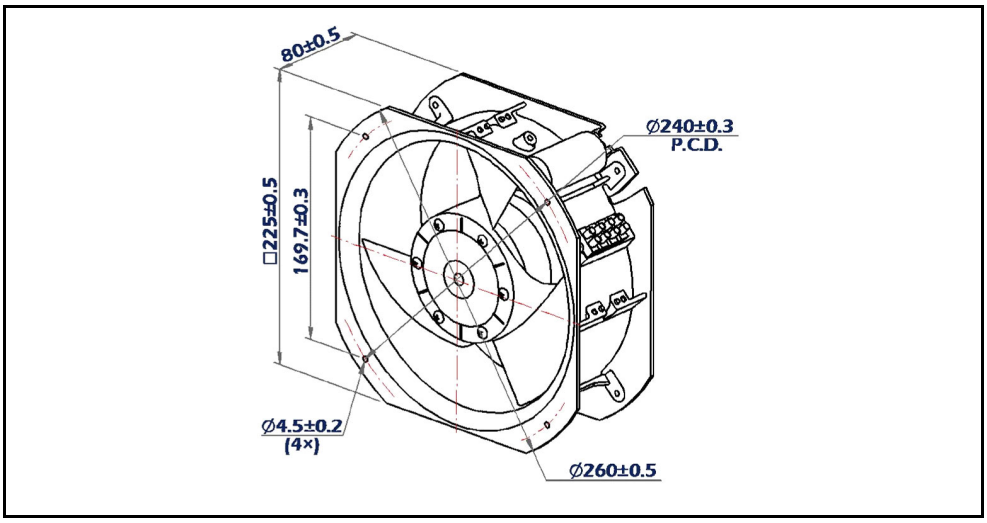

Similar Products

Product	Size	Impeller Material	Speed	Noise	Weight
HIG-A225SM115H05I54K	225 x 225 x 80	Steel (Metal) Impeller	2800/3200	68/71	2750
N/A					
N/A					
N/A					
N/A					

Finger Guard Accessory's

Product	Guard Type	Fan Size	Weight (g)
N/A			
N/A			
N/A			

Additional Information

Box Quantity:	5
Weight Per Box:	13.75 KG
Size Per Box:	41×27.5×28.4