HIGHLAND

Features:

Size (mm): 172 x 151 x 51

Maintenance-Free Ball Bearings

Aluminum Housing, Steel Impeller

Insulation Class B, IP54

Thermally Protected (Auto Restart)

115 VAC

Highland Axial AC Fan

Part Number: HIG-A172CM115M13I54T

Product Description

Highland 172mm x 151mm Side Cut 51mm Thick Axial Fan with Steel (Metal) Impeller, 115 VAC, Medium Speed, AC Induction Capacitor Motor, IP54 Protection with Terminals

General Specification

Fan Type	Axial
Operating Voltage	115 VAC
Hz	50/60
Speed (RPM)	2400/2400
Airflow - CFM	183/185
Airflow - cubic m^3/hr	310.919/314.317
Airflow - m^3/s	0.086/0.087
Pressure - mmH^20	6.3/4.9
Pressure - $inchH^20$	0.248/0.193
Pressure - Pa	61.782/48.053
Noise dB	51/51
Operating Temperature	-20℃ to +70℃
Expected Life (H)	70K @ 25 / 45K @ 40 Degrees Centigrade
Weight (g)	940
Tariff Code	8414.59.6590

Mechanical Specifications

Fan Size	172 x 151 x 51
Frame Material	Aluminium
Impeller	Steel (Metal) Impeller

Approvals and Certificates

Approvals	CE	Y
	TUV	Y
	RoSH	Y
	UL	Y

Airflow Graph

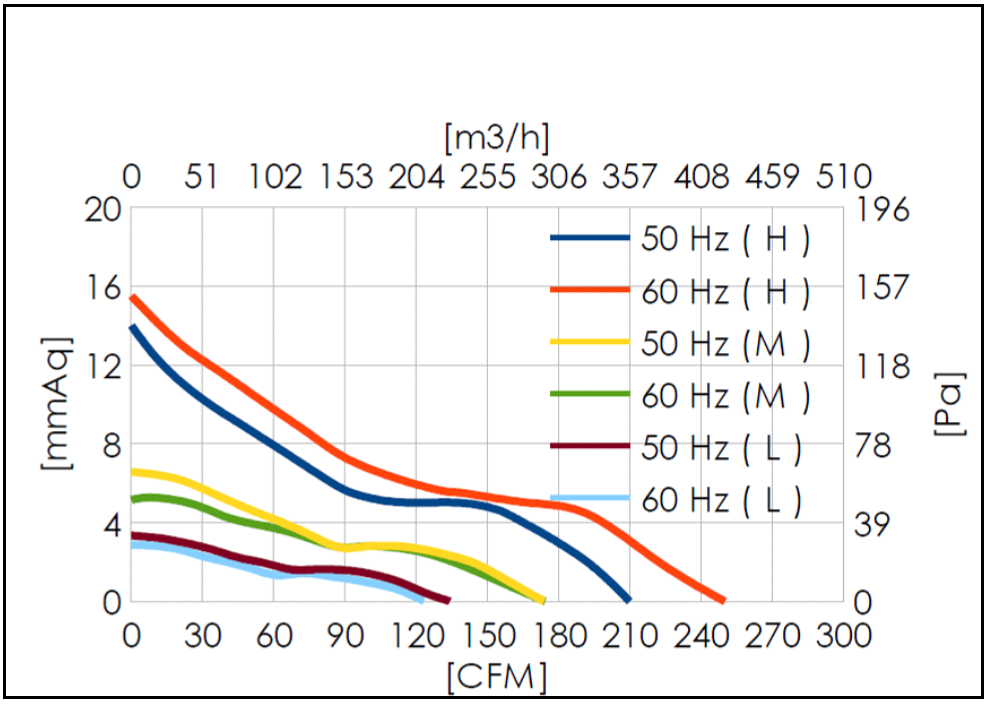

Dimensional Drawing (mm)

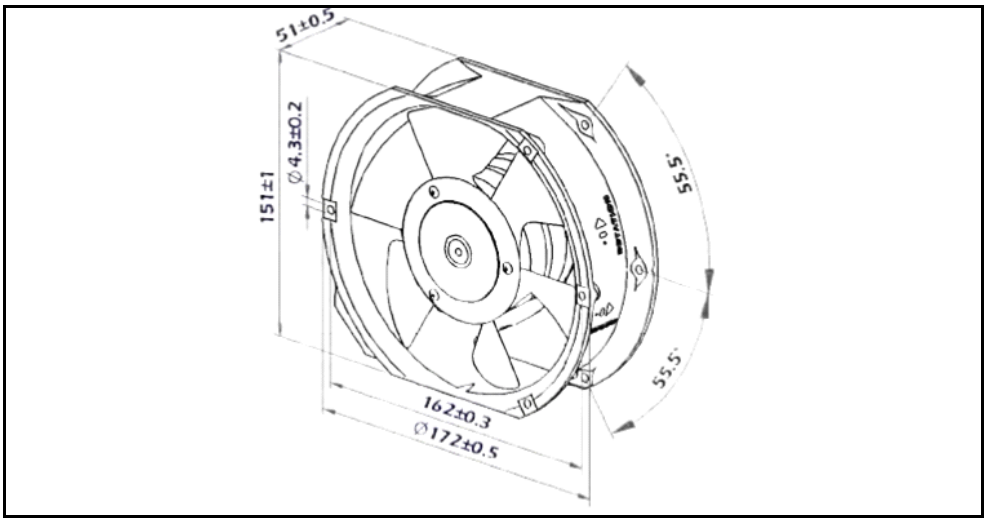

Similar Products

Product	Size	Impeller Material	Speed	Noise	Weight
HIG-A172CP230S13I54T	172 x 151 x 51	Plastic Impeller	2800/3300	55/61	1050
HIG-A172CM230S13I54T	172 x 151 x 51	Steel (Metal) Impeller	2800/3300	55/61	1080
HIG-A172CP230U13I54L	172 x 151 x 51				
HIG-A172CP230U13I54T	172 x 151 x 51				
HIG-A172CMDUAS13I54L	172 x 151 x 51				

Finger Guard Accessory's

Product	Guard Type	Fan Size	Weight (g)
N/A			
N/A			
N/A			

Additional Information

Box Quantity:	12
Weight Per Box:	11.28 KG
Size Per Box:	41×39×21