Features:

Size (mm): 172 x 151 x 55

Maintenance-Free Ball Bearings

Aluminum Housing, Steel Impeller

Insulation Class B, IP54

Thermally Protected (Auto Restart)

230 VAC

Highland Axial AC Fan

Part Number: HIG-A151CM230H12I54L

Axial Fan

HIGHLAND

Product Description

Highland 172mm x 151mm Round 55mm Thick Axial Fan with Steel (Metal) Impeller, 230 VAC, High Speed, AC Induction Capacitor Motor, IP54 Protection with Lead Wires

General Specification

Fan Type	Axial
Operating Voltage	230 VAC
Input Power (W)	26/27
Hz	50/60
Speed (RPM)	2700/3100
Airflow - CFM	210/250
Airflow - cubic m^3/hr	356.792/424.753
Airflow - m^3/s	5.947/7.079
Pressure - mmH^20	14/15.5
Pressure - $inchH^20$	0.551/0.61
Pressure - Pa	137.293/152.003
Noise dB	53/59
Operating Temperature	-20℃ to +70℃
Expected Life (H)	70K @ 25 / 45K @ 40 Degrees Centigrade
Weight (g)	840
Tariff Code	8414.59.6590

Mechanical Specifications

Fan Size	172 x 151 x 55
Frame Material	Aluminium
Impeller	Steel (Metal) Impeller

Approvals and Certificates

Approvals	CE	Y
	TUV	Y
	RoSH	Y
	UL	Y

Axial Fan

HIGHLAND

Airflow Graph

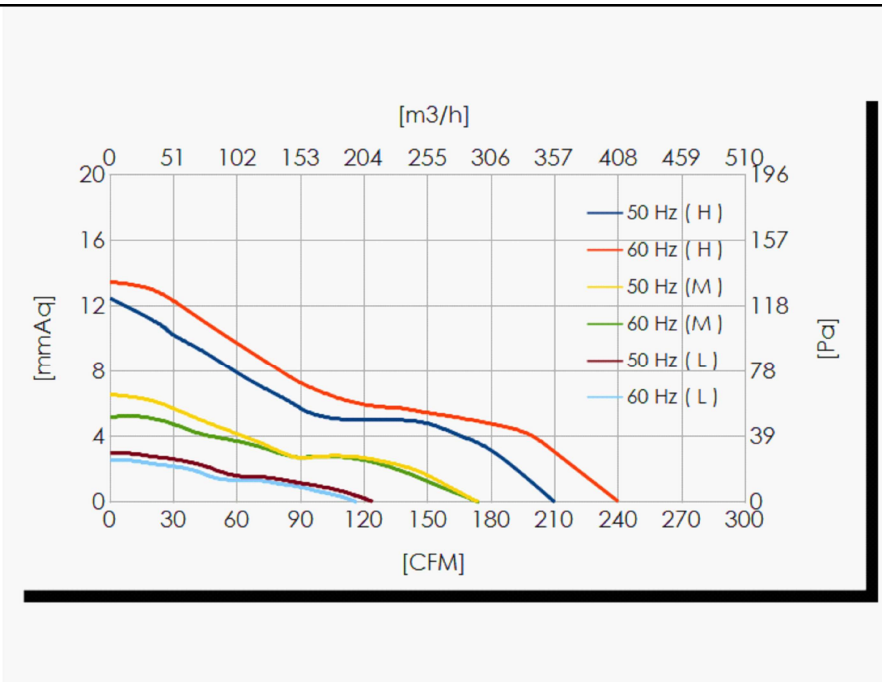

Dimensional Drawing (mm)

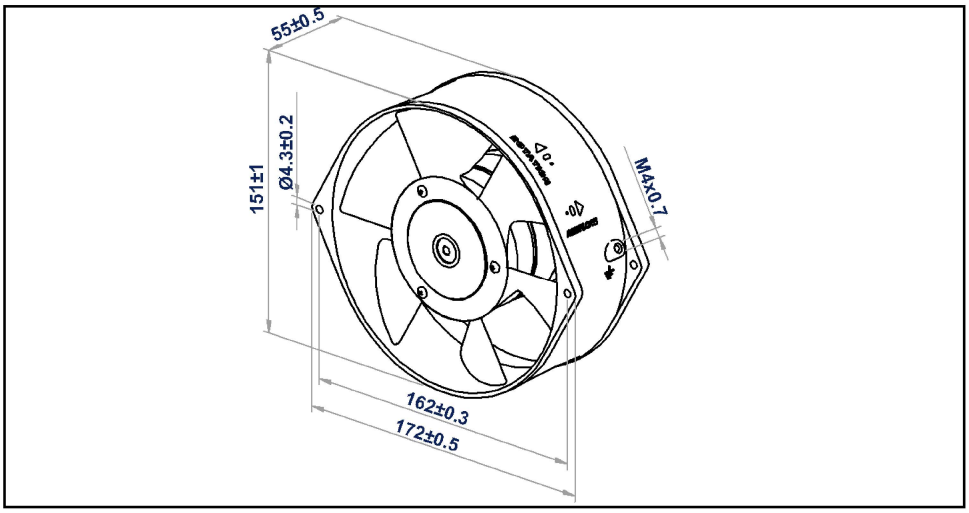

Similar Products

Product	Size	Impeller Material	Speed	Noise	Weight
HIG-A172CM115H12I54L					
HIG-A172CP115H12I54T					
HIG-A172CM115H12I54T					
HIG-A172CP115M12I54L					
HIG-A172CM115M12I54L					

Finger Guard Accessory's

Product	Guard Type	Fan Size	Weight (g)
N/A			
N/A			
N/A			

Additional Information

Box Quantity:	12
Weight Per Box:	10.08 KG
Size Per Box:	41×39×21