Features:

Size (mm): 172 x 151 x 55

Maintenance-Free Ball Bearings

Aluminum Housing, Steel Impeller

Insulation Class B, IP54

Thermally Protected (Auto Restart)

115 VAC

Highland Axial AC Fan

Part Number: HIG-A151CM115S12I54T

Axial Fan

HIGHLAND

Product Description

Highland 172mm x 151mm Round 55mm Thick Axial Fan with Steel (Metal) Impeller, 115 VAC, Super Speed, AC Induction Capacitor Motor, IP54 Protection with Terminals

General Specification

Fan Type	Axial
Operating Voltage	115 VAC
Input Power (W)	26/26
Hz	50/60
Speed (RPM)	2800/3300
Airflow - CFM	220/260
Airflow - cubic m^3/hr	373.782/441.743
Airflow - m^3/s	6.23/7.362
Pressure - mmH^20	16.5/20.0
Pressure - $inchH^20$	0.65/0.787
Pressure - Pa	161.81/196.133
Noise dB	55/61
Operating Temperature	-20℃ to +70℃
Expected Life (H)	70K @ 25 / 45K @ 40 Degrees Centigrade
Weight (g)	980
Tariff Code	8414.59.6590

Mechanical Specifications

Fan Size	172 x 151 x 55
Frame Material	Aluminium
Impeller	Steel (Metal) Impeller

Approvals and Certificates

Approvals	CE	Y
	TUV	Y
	RoSH	Y
	UL	Y

Axial Fan

HIGHLAND

Airflow Graph

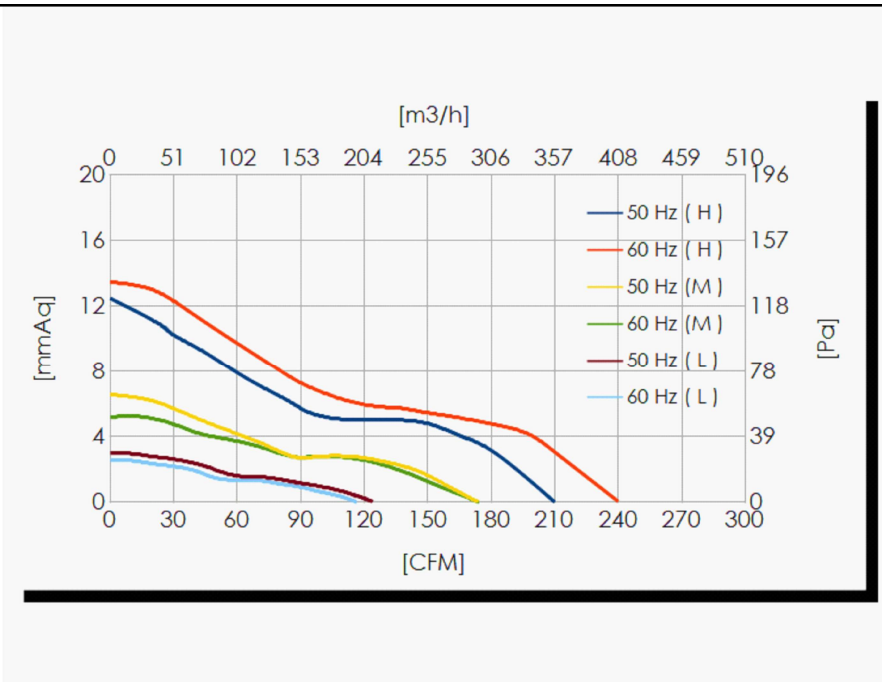

Dimensional Drawing (mm)

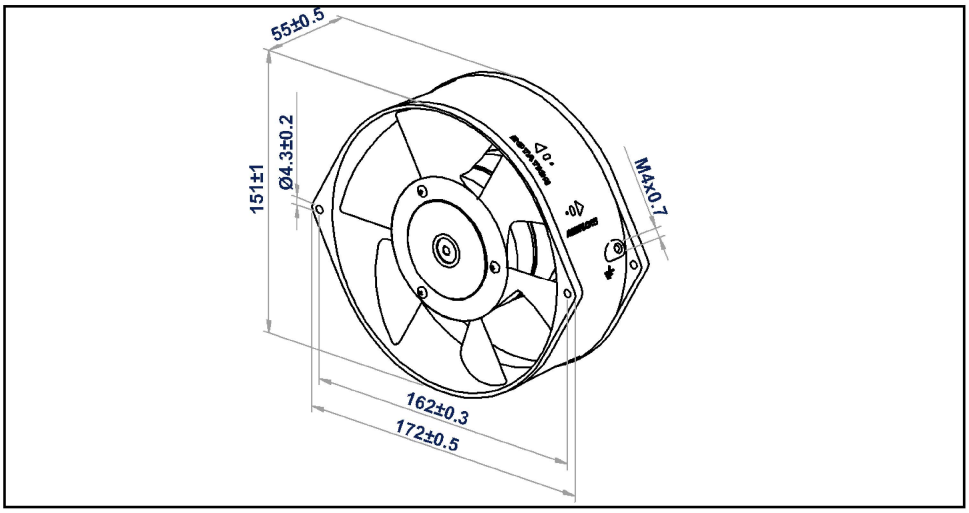

Similar Products

Product	Size	Impeller Material	Speed	Noise	Weight
HIG-A172CM115H12I54L					
HIG-A172CP115H12I54T					
HIG-A172CM115H12I54T					
HIG-A172CP115M12I54L					
HIG-A172CM115M12I54L					

Finger Guard Accessory's

Product	Guard Type	Fan Size	Weight (g)
N/A			
N/A			
N/A			

Additional Information

Box Quantity:	12
Weight Per Box:	11.76 KG
Size Per Box:	41×39×21