DC Fan

38×38×28 mm

San Ace 38 9HVA type

General Specifications

- Material ..... Frame: Plastic (Flammability: UL 94V-0), Impeller: Plastic (Flammability: UL 94V-1)
- Expected life ..... See the table below. (L10 life: 90% survival rate for continuous operation in free air at 60˚C, rated voltage) Expected life at 40°C is for reference only.
- Motor protection function ..... Locked rotor burnout protection, Reverse polarity protection For details, please refer to p. 616.
- Dielectric strength ..... 50/60 Hz, 500 VAC, for 1 minute (between lead wire conductors and frame)
- Insulation resistance ..... 10 MΩ min. at 500 VDC (between lead wire conductors and frame)
- Sound pressure level (SPL) ..... A-weighted sound pressure level (SPL) at 1 m away from the air inlet.
- Storage temperature ..... -30 to +70˚C (Non-condensing)
- Lead wire ..... ⊕Red ⊖Black Sensor Yellow Control Brown
- Mass ..... 53 g

Specifications

The models listed below **have ribs and a pulse sensor with PWM control.** For models without ribs, append "1" to the end of model numbers.

Model no.	Rated voltage [V]	Operating voltage range [V]	PWM duty cycle* [%]	Rated current [A]	Rated input [W]	Rated speed [min⁻¹]	Max. airflow [m³/min]	Max. airflow [CFM]	Max. static pressure [Pa]	Max. static pressure [inchH₂O]	SPL [dB (A)]	Operating temperature [˚C]	Expected life [h]
9HVA0312P3K001	12	10.8 to 13.2	100	2.1	25.2	38500	0.91	32.2	2100	8.40	69	-20 to +70	30000/60˚C (53000/40˚C)
			20	0.06	0.72	6000	0.14	4.9	51.0	0.204	29		
9HVA0312P3G001			100	1.1	13.2	30000	0.71	25.1	1300	5.20	64		40000/60˚C (70000/40˚C)
			20	0.05	0.60	5000	0.11	3.8	36.1	0.144	25		

* PWM frequency is 25 kHz. Models without ratings for 0% PWM duty cycle have zero speed at 0%. When control terminal is open, speed is the same as at 100% duty cycle.

Airflow - Static Pressure Characteristics / PWM Duty - Speed Characteristics Example

9HVA0312P3K001 With pulse sensor with PWM control

PWM duty cycle

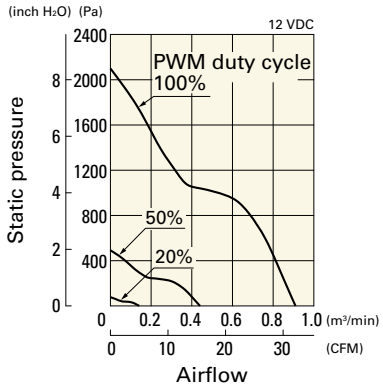

Operating voltage range

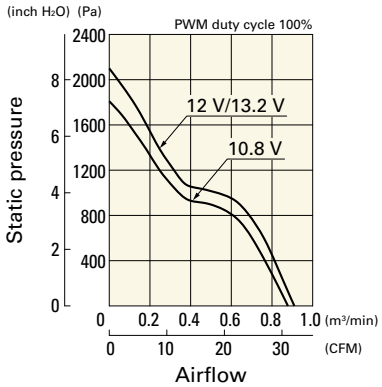

PWM duty - Speed characteristics example

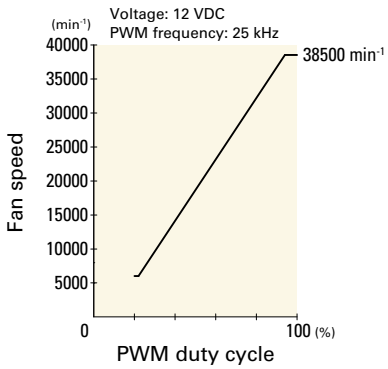

9HVA0312P3G001 With pulse sensor with PWM control

PWM duty cycle

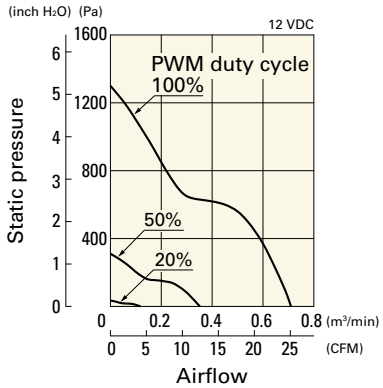

Operating voltage range

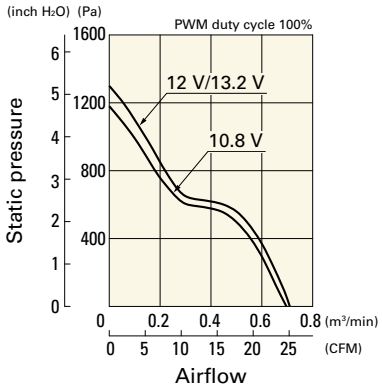

PWM duty - Speed characteristics example

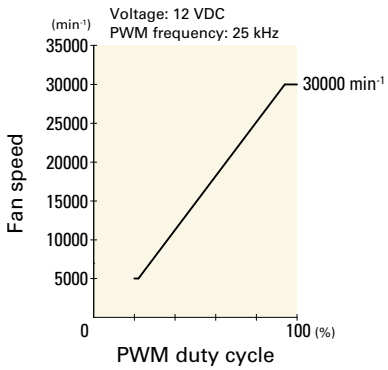

Dimensions (unit: mm) (With ribs)

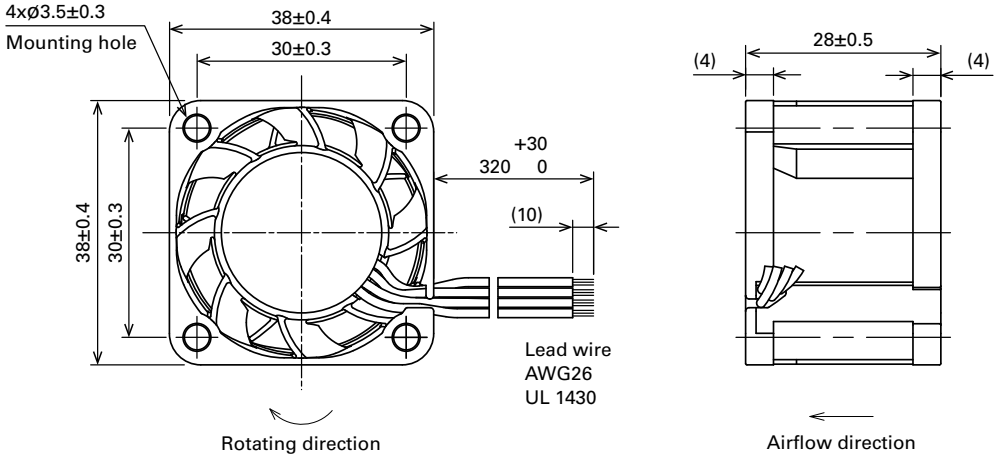

Reference Dimensions of Mounting Holes and Vent Opening (unit: mm)

Inlet side, Outlet side

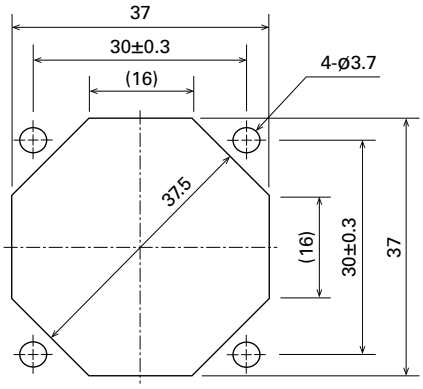

Options

Finger guards	page: p. 598

Model no.: 109-1065