Centrifugal Fan

Cooling fan blows air in a centrifugal course. It features high static pressure.
Related product: Splash Proof Centrifugal Fan p. 299

Model Numbering System

Not every combination of the following codes or characters is available. Contact us for an available combination.

9T	M	48	P	4	H	01
Type name	Impeller size	Voltage	PWM control function	Thickness	Speed code	Individual customer's spec (2 to 3 digits)

Bracket-mounted Centrifugal Fan

9B1T	P	48	P	0	H	001
Type name	Impeller size	Voltage	PWM control function	Thickness	Speed code	Individual customer's spec (3 digits)

Type name	9B1T	9T					
Impeller size (mm)	D	G, GA	J	M	N	P	S
	ø70	ø175	ø133	ø100	ø150	ø221	ø225
Voltage (V)	12	24	48				
	12	24	48				
Thickness (mm)	0		1	4	6		
	69 min., 99, 119		35	25	20		
Speed code	H	G	etc.				

How to Read Specifications (DC fan)

The following is a sample. See respective product pages for detailed information.

Model no.	Rated voltage [V]	Operating voltage range [V]	Rated current [A]	Rated input [W]	Rated speed [min^{-1}]	Max. airflow [m^3/min]	Max. airflow [CFM]	Max. static pressure [Pa]	Max. static pressure [inchH_2O]	SPL [dB (A)]	Operating temperature [°C]	Expected life [h]
9GA0412G7001	12	7 to 13.8	0.17	2.04	13100	0.36	12.7	192	0.77	42	-20 to +70	40000/60°C (70000/40°C)

Rated voltage ····· This is the necessary voltage to drive the fan. E.g.) 12 VDC, 24 VDC, 48 VDC
Operating voltage range ····· The voltage range over which fan operation is guaranteed.
Rated current ····· The current when the fan is operating at rated voltage (at free air).
Rated input ····· The power value when the fan is operating at rated voltage (at free air).
Rated speed ····· The speed when the fan is operating at rated voltage (at free air).
Max. airflow ····· The airflow at 0 Pa static pressure when the fan is operating at rated voltage. (Measured using the double chamber method)
Max. static pressure ····· The static pressure at 0 m^3/min airflow when the fan is operating at rated voltage. (Measured using the double chamber method)
SPL ····· A-weighted sound pressure level (SPL) when the fan operates at the rated speed.
For the measurement method, see the Technical Materials section in the catalog.
Operating temperature ····· The temperature range over which fan operation is guaranteed (Non-condensing).
Expected life ····· Service life hours that 90% of bearings will survive without failing when continuously operated at the rated voltage and 60°C temperature. Expected life at 40°C is for reference only.
For more information, please refer to the technical material section.

ø70×20 mm

San Ace C70 9TD type

General Specifications

- Material ..... Motor case: Aluminum (Black coating), Impeller: Plastic (Flammability: UL 94V-0)
- Expected life ..... See the table below. (L10 life: 90% survival rate for continuous operation in free air at 60˚C, rated voltage) Expected life at 40°C is for reference only.
- Motor protection function ..... Locked rotor burnout protection, Reverse polarity protection For details, please refer to p. 580.
- Dielectric strength ..... 50/60 Hz, 500 VAC, for 1 minute (between lead wire conductors and motor case)
- Insulation resistance ..... 10 MΩ min. at 500 VDC (between lead wire conductors and motor case)
- Sound pressure level (SPL) ..... A-weighted sound pressure level (SPL) at 1 m away from the air inlet.
- Storage temperature ..... -30 to +70˚C (Non-condensing)
- Lead wire ..... ⊕Red ⊖Black Sensor Yellow Control Brown
- Mass ..... 90 g

Specifications

When the optional inlet nozzle (109-1106) is mounted.

The models listed below **have pulse sensors with PWM control function.**

Model no.	Rated voltage [V]	Operating voltage range [V]	PWM duty cycle* [%]	Rated current [A]	Rated input [W]	Rated speed [min⁻¹]	Max. airflow [m³/min]	Max. airflow [CFM]	Max. static pressure [Pa]	Max. static pressure [inchH₂O]	SPL [dB (A)]	Operating temperature [˚C]	Expected life [h]
9TD12P6G001	12	10.8 to 13.2	100	1.0	12	9200	1.13	39.9	560	2.24	61	-20 to +70	40000/60˚C (70000/40˚C)
			20	0.1	1.2	2000	0.23	8.1	25	0.10	30		

* PWM frequency is 25 kHz. Models without ratings for 0% PWM duty cycle have zero speed at 0%. When control terminal is open, speed is the same as at 100% duty cycle.

Note: Max input is 12.6 W at rated voltage.

Airflow - Static Pressure Characteristics / PWM Duty - Speed Characteristics Example

9TD12P6G001 With pulse sensor with PWM control function

PWM duty cycle

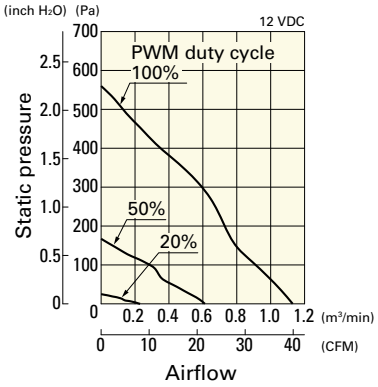

Operating voltage range

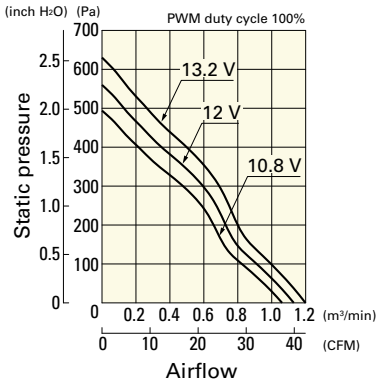

PWM duty - Speed characteristics example

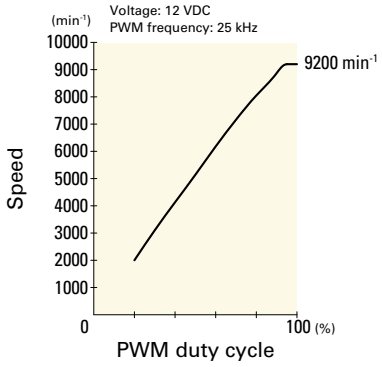

Dimensions (unit: mm)

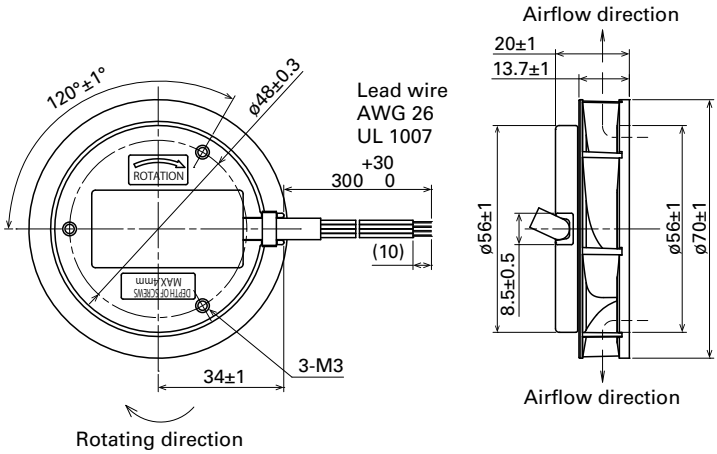

Reference Dimensions of Mounting Holes and Vent Opening (unit: mm)

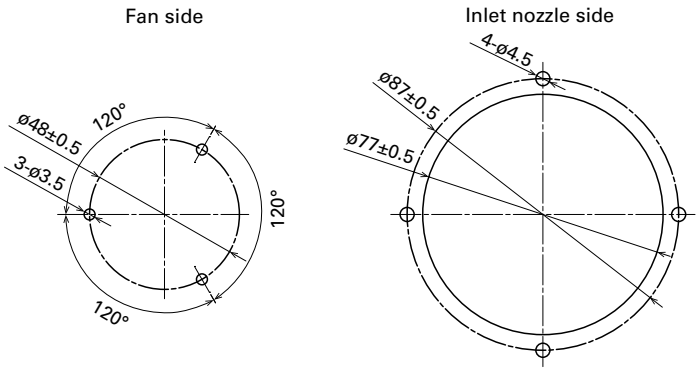

Reference Diagram for Mounting (unit: mm)

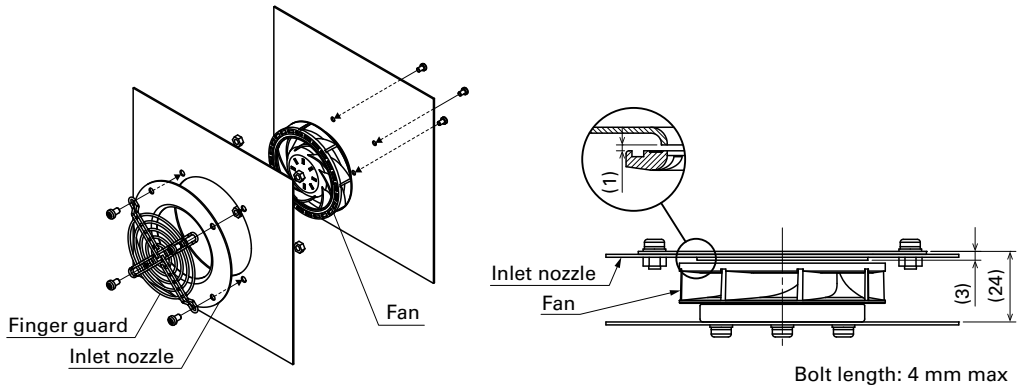

Options

Finger guards	page: p. 564
Model no.: 109-1128	

Inlet nozzle	page: p. 569
Model no.: 109-1106	

ø100×25 mm

San Ace C100 9TM type

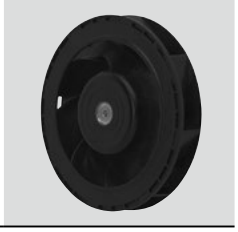

General Specifications

- Material ..... Motor case: Aluminum (Black coating), Impeller: Plastic (Flammability: UL 94V-0)
- Expected life ..... See the table below. (L10 life: 90% survival rate for continuous operation in free air at 60˚C, rated voltage) Expected life at 40°C is for reference only.
- Motor protection function ..... Locked rotor burnout protection, Reverse polarity protection For details, please refer to p. 580.
- Dielectric strength ..... 50/60 Hz, 500 VAC, for 1 minute (between lead wire conductors and motor case)
- Insulation resistance ..... 10 MΩ min. at 500 VDC (between lead wire conductors and motor case)
- Sound pressure level (SPL) ..... A-weighted sound pressure level (SPL) at 1 m away from the air inlet.
- Storage temperature ..... -30 to +70˚C (Non-condensing)
- Lead wire ..... ⊕Red ⊖Black Sensor Yellow Control Brown
- Mass ..... 150 g

Specifications

When the optional inlet nozzle (109-1080) is mounted.

The models listed below **have pulse sensors with PWM control function.**

Model no.	Rated voltage [V]	Operating voltage range [V]	PWM duty cycle* [%]	Rated current [A]	Rated input [W]	Rated speed [min⁻¹]	Max. airflow [m³/min]	Max. airflow [CFM]	Max. static pressure [Pa]	Max. static pressure [inchH₂O]	SPL [dB (A)]	Operating temperature [˚C]	Expected life [h]
9TM24P4H01	24	21.6 to 26.4	100	0.44	10.56	6400	1.77	62.5	560	2.25	60	-20 to +70	40000/60˚C (70000/40˚C)
			0	0.05	1.2	2000	0.51	18.0	48	0.19	34		
9TM48P4H01	48	36 to 60	100	0.22	10.56	6400	1.77	62.5	560	2.25	60		
			0	0.04	1.92	2000	0.51	18.0	48	0.19	34		

* PWM frequency is 25 kHz. Models without ratings for 0% PWM duty cycle have zero speed at 0%. When control terminal is open, speed is the same as at 100% duty cycle.

Note 1: Max input is 14 W at rated voltage.
Note 2: Sensor and control options are available for selection. Refer to the table on p. 617.

Airflow - Static Pressure Characteristics / PWM Duty - Speed Characteristics Example

9TM24P4H01 With pulse sensor with PWM control function

PWM duty cycle

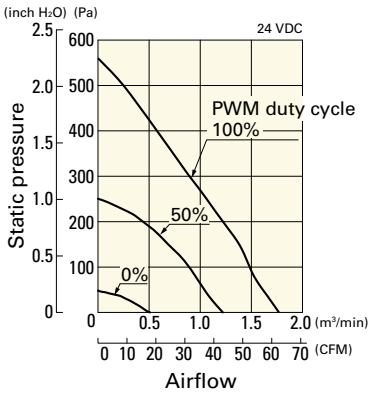

Operating voltage range

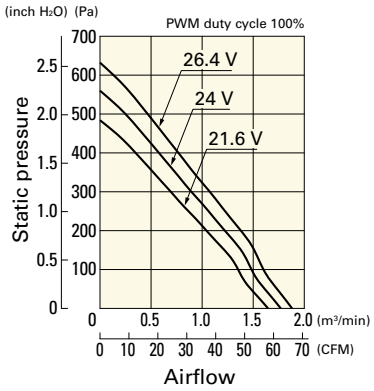

PWM duty - Speed characteristics example

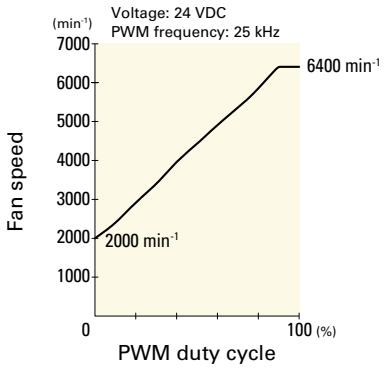

Airflow - Static Pressure Characteristics / PWM Duty - Speed Characteristics Example

9TM48P4H01 With pulse sensor with PWM control function

PWM duty cycle

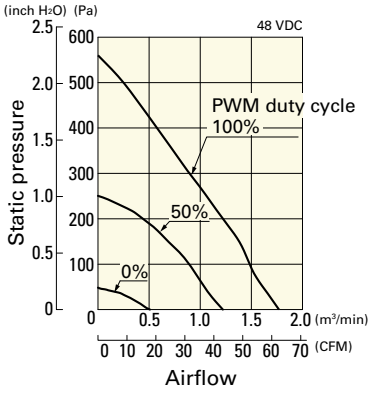

Operating voltage range

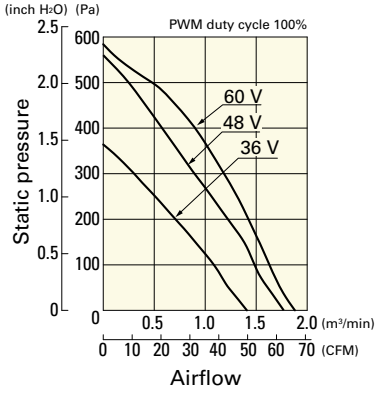

PWM duty - Speed characteristics example

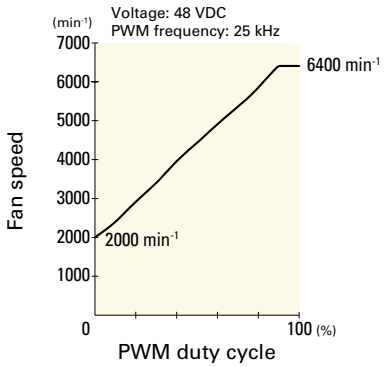

Dimensions (unit: mm)

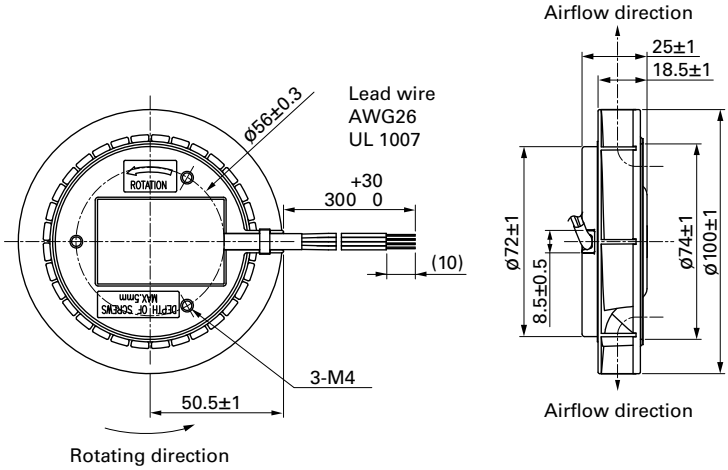

Reference Dimensions of Mounting Holes and Vent Opening (unit: mm)

Fan side

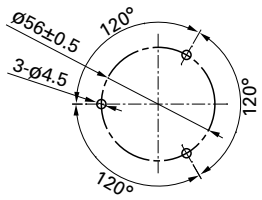

Inlet nozzle side

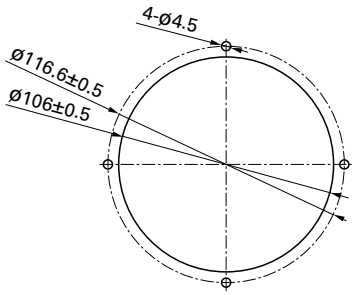

Reference Diagram for Mounting (unit: mm)

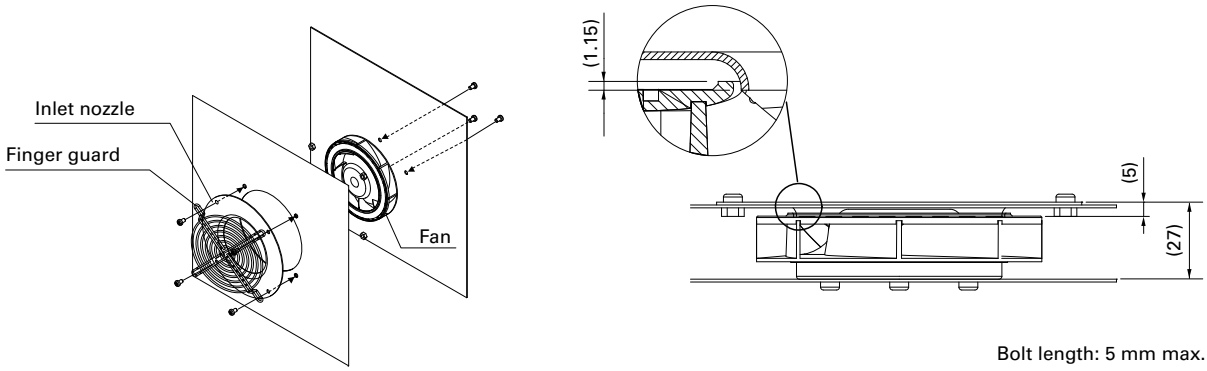

Bolt length: 5 mm max.

Options

Finger guards	page: p. 564

Model no.: 109-099E, 109-099H

Inlet nozzle	page: p. 569

Model no.: 109-1080, 109-1080H

ø133×91 mm

San Ace C133 9TJ type

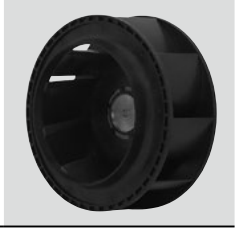

General Specifications

- Material ..... Motor case: Aluminum (Black coating), Impeller: Plastic (Flammability: UL 94V-0)
- Expected life ..... See the table below. (L10 life: 90% survival rate for continuous operation in free air at 60˚C, rated voltage) Expected life at 40°C is for reference only.
- Motor protection function ..... Locked rotor burnout protection, Reverse polarity protection For details, please refer to p. 580.
- Dielectric strength ..... 50/60 Hz, 500 VAC, for 1 minute (between lead wire conductors and motor case)
- Insulation resistance ..... 10 MΩ min. at 500 VDC (between lead wire conductors and motor case)
- Sound pressure level (SPL) ..... A-weighted sound pressure level (SPL) at 1 m away from the air inlet.
- Storage temperature ..... -30 to +70˚C (Non-condensing)
- Lead wire ..... ⊕Red ⊖Black Sensor Yellow Control Brown
- Mass ..... 660 g

Specifications

When the optional inlet nozzle (109-1069) is mounted.

The models listed below **have pulse sensors with PWM control function.**

Model no.	Rated voltage [V]	Operating voltage range [V]	PWM duty cycle* [%]	Rated current [A]	Rated input [W]	Rated speed [min⁻¹]	Max. airflow [m³/min]	Max. airflow [CFM]	Max. static pressure [Pa]	Max. static pressure [inchH₂O]	SPL [dB (A)]	Operating temperature [˚C]	Expected life [h]
9TJ24P0H61	24	20.4 to 27.6	100	1.2	28.8	4150	6.39	226	395	1.59	61	-20 to +70	40000/60˚C (70000/40˚C)
9TJ48P0H01	48	36 to 72	100	0.55	26.4	4150	6.39	226	395	1.59	61		

* PWM frequency is 25 kHz. Models without ratings for 0% PWM duty cycle have zero speed at 0%. When control terminal is open, speed is the same as at 100% duty cycle.

Airflow - Static Pressure Characteristics / PWM Duty - Speed Characteristics Example

9TJ24P0H61 With pulse sensor with PWM control function

PWM duty cycle

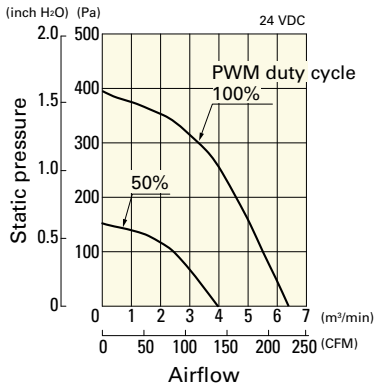

Operating voltage range

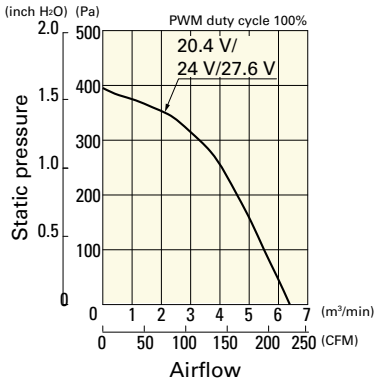

PWM duty - Speed characteristics example

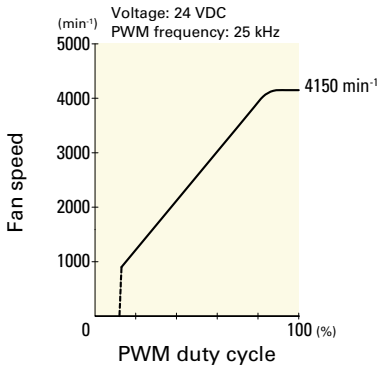

9TJ48P0H01 With pulse sensor with PWM control function

PWM duty cycle

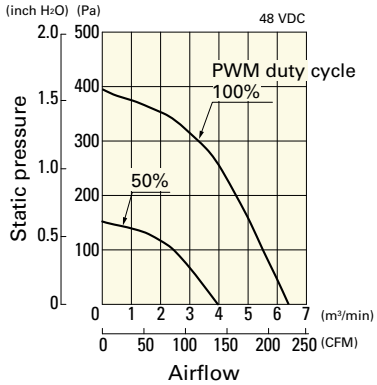

Operating voltage range

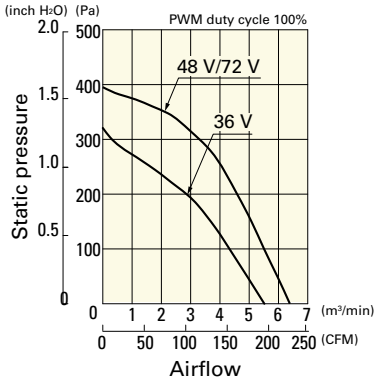

PWM duty - Speed characteristics example

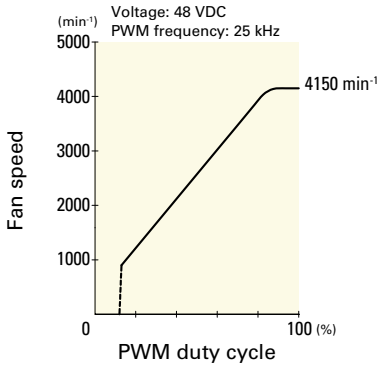

Dimensions (unit: mm)

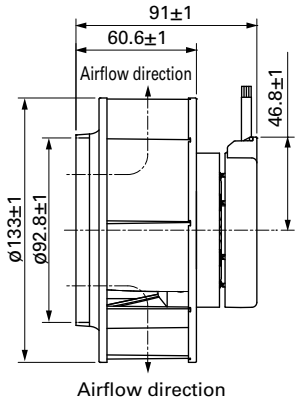

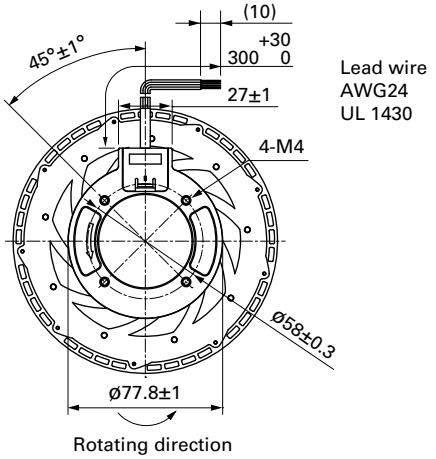

Lead wire
AWG24
UL 1430

Reference Dimensions of Mounting Holes and Vent Opening (unit: mm)

Fan side

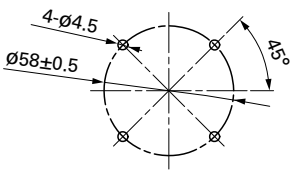

Inlet nozzle side

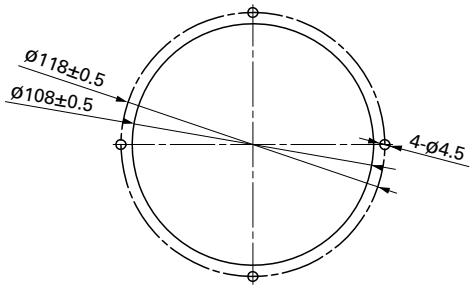

Reference Diagram for Mounting (unit: mm)

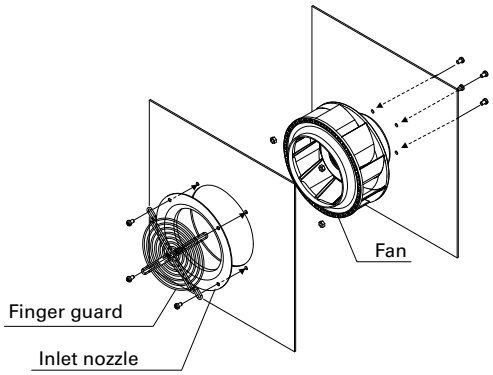

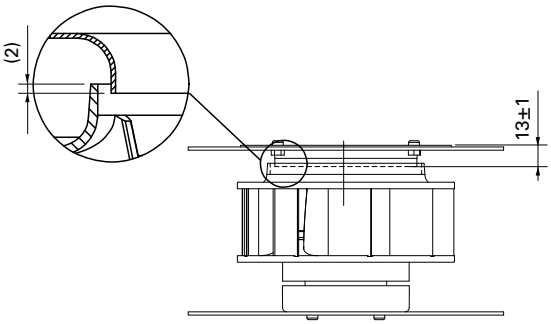

Bolt length: 6 mm max.

Options

Finger guards	page: p. 565
Model no.: 109-1112	

Inlet nozzle	page: p. 569
Model no.: 109-1069, 109-1069H	

ø150×35 mm

San Ace C150 9TN type

General Specifications

- Material ..... Motor case: Aluminum (Black coating), Impeller: Plastic (Flammability: UL 94V-0)
- Expected life ..... See the table below. (L10 life: 90% survival rate for continuous operation in free air at 60˚C, rated voltage) Expected life at 40°C is for reference only.
- Motor protection function ..... Locked rotor burnout protection, Reverse polarity protection For details, please refer to p. 580.
- Dielectric strength ..... 50/60 Hz, 500 VAC, for 1 minute (between lead wire conductors and motor case)
- Insulation resistance ..... 10 MΩ min. at 500 VDC (between lead wire conductors and motor case)
- Sound pressure level (SPL) ..... A-weighted sound pressure level (SPL) at 1 m away from the air inlet.
- Storage temperature ..... -30 to +70˚C (Non-condensing)
- Lead wire ..... ⊕Red ⊖Black Sensor Yellow Control Brown
- Mass ..... 330 g

Specifications

When the optional inlet nozzle (109-1081) is mounted.

The models listed below **have pulse sensors with PWM control function.**

Model no.	Rated voltage [V]	Operating voltage range [V]	PWM duty cycle* [%]	Rated current [A]	Rated input [W]	Rated speed [min⁻¹]	Max. airflow [m³/min]	Max. airflow [CFM]	Max. static pressure [Pa]	Max. static pressure [inchH₂O]	SPL [dB (A)]	Operating temperature [˚C]	Expected life [h]
9TN24P1H01	24	20.4 to 27.6	100	0.62	14.9	3800	3.83	135	410	1.65	59	-20 to +70	40000/60˚C (70000/40˚C)
9TN48P1H01	48	36.0 to 55.2	100	0.32	15.4	3800	3.83	135	390	1.57	59		

* PWM frequency is 25 kHz. Models without ratings for 0% PWM duty cycle have zero speed at 0%. When control terminal is open, speed is the same as at 100% duty cycle.

Note: Max input of 9TN24P1H01: 21.4 W, 9TN48P1H01: 22 W.

Airflow - Static Pressure Characteristics / PWM Duty - Speed Characteristics Example

9TN24P1H01 With pulse sensor with PWM control function

PWM duty cycle

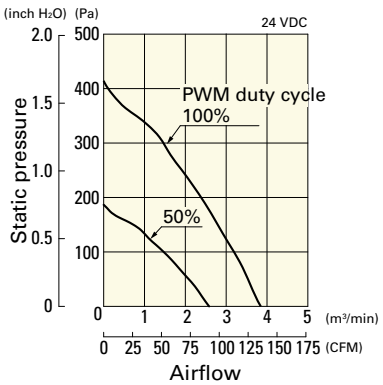

Operating voltage range

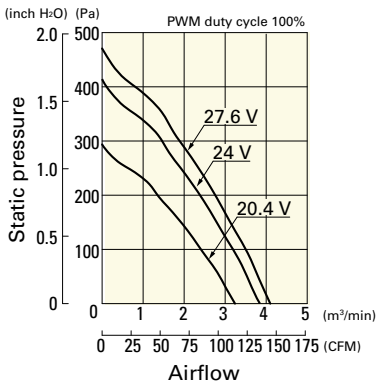

PWM duty - Speed characteristics example

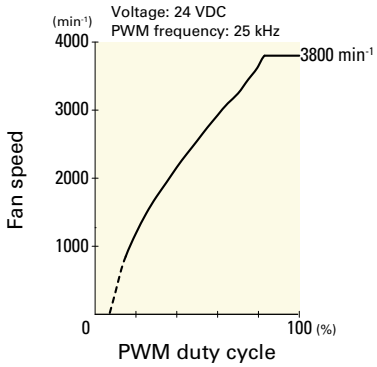

9TN48P1H01 With pulse sensor with PWM control function

PWM duty cycle

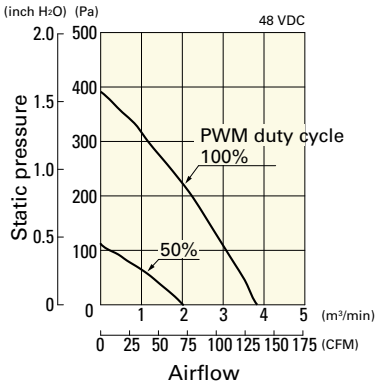

Operating voltage range

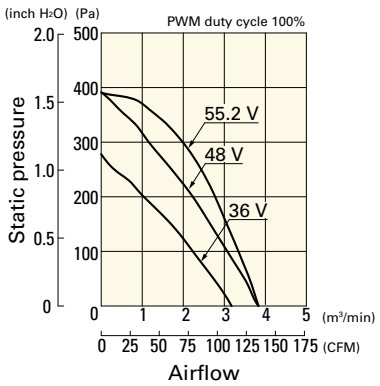

PWM duty - Speed characteristics example

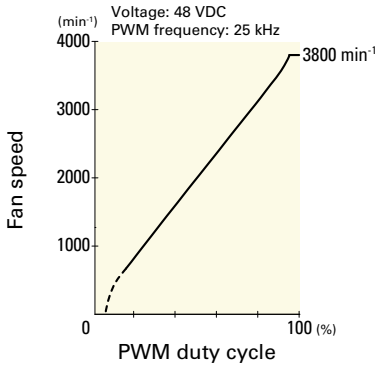

Dimensions (unit: mm)

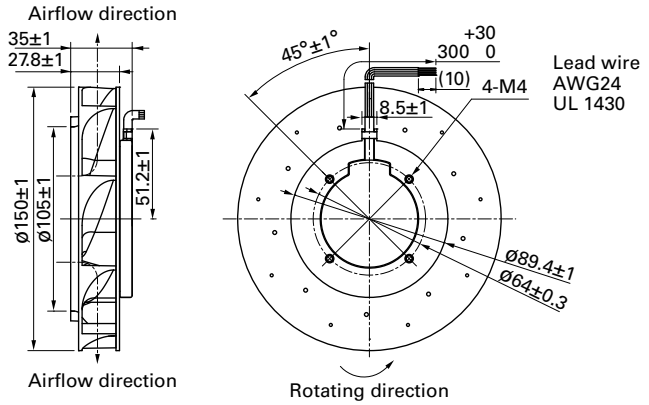

Reference Dimensions of Mounting Holes and Vent Opening (unit: mm)

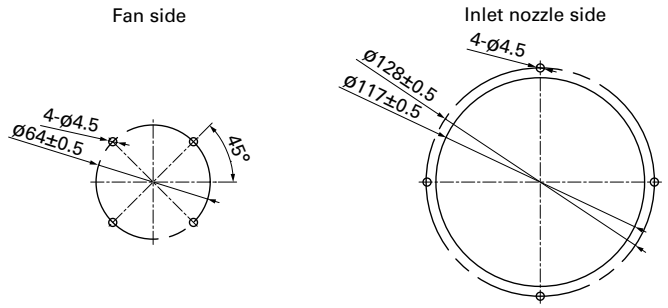

Reference Diagram for Mounting (unit: mm)

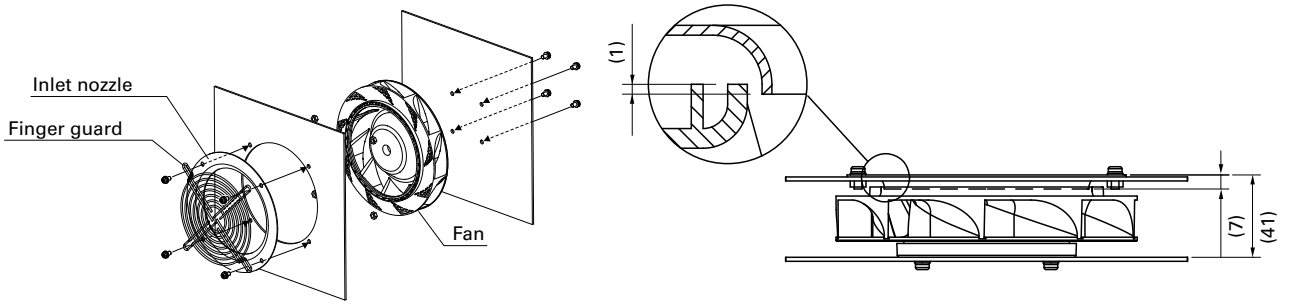

Bolt length: 4 to 6 mm.

Options

Finger guards	page: p. 565
Model no.: 109-1104, 109-1104H	

Inlet nozzle	page: p. 569
Model no.: 109-1081, 109-1081H	

ø175×69 mm

San Ace C175 9TGA type

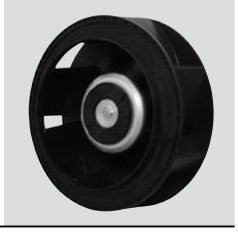

General Specifications

- Material ..... Motor case: Aluminum (Black coating), Impeller: Plastic (Flammability: UL 94V-0)
- Expected life ..... See the table below. (L10 life: 90% survival rate for continuous operation in free air at 60˚C, rated voltage) Expected life at 40°C is for reference only.
- Motor protection function ..... Locked rotor burnout protection, Reverse polarity protection For details, please refer to p. 580.
- Dielectric strength ..... 50/60 Hz, 500 VAC, for 1 minute (between lead wire conductors and motor case)
- Insulation resistance ..... 10 MΩ min. at 500 VDC (between lead wire conductors and motor case)
- Sound pressure level (SPL) ..... A-weighted sound pressure level (SPL) at 1 m away from the air inlet.
- Storage temperature ..... -30 to +70˚C (Non-condensing)
- Lead wire ..... ⊕Red ⊖Black Sensor Yellow Control Brown
- Mass ..... 720 g

Specifications

When the optional inlet nozzle (109-1073) is mounted.

The models listed below **have pulse sensors with PWM control function.**

Model no.	Rated voltage [V]	Operating voltage range [V]	PWM duty cycle* [%]	Rated current [A]	Rated input [W]	Rated speed [min⁻¹]	Max. airflow [m³/min]	Max. airflow [CFM]	Max. static pressure [Pa]	Max. static pressure [inchH₂O]	SPL [dB (A)]	Operating temperature [˚C]	Expected life [h]
9TGA24P0H001	24	16 to 36	100	4.8	115	4950	15.3	541	830	3.33	77	-20 to +70	40000/60˚C (70000/40˚C)
			15	0.14	3.36	800	2.5	88.3	21.8	0.088	38		
9TGA48P0G001	48	36 to 72	100	3.5	168	5700	17.6	622	1100	4.42	80		
			15	0.07	3.36	800	2.5	88.3	21.8	0.088	38		

* PWM frequency is 25 kHz. Models without ratings for 0% PWM duty cycle have zero speed at 0%. When control terminal is open, speed is the same as at 100% duty cycle.

Note 1: Max input of 9TGA24P0H001: 210 W, 9TGA48P0G001: 325 W at rated voltage.
Note 2: The » mark indicates Short Lead Time Service applicable models. See p. 630 for details.

Airflow - Static Pressure Characteristics / PWM Duty - Speed Characteristics Example

9TGA24P0H001 With pulse sensor with PWM control function

PWM duty cycle

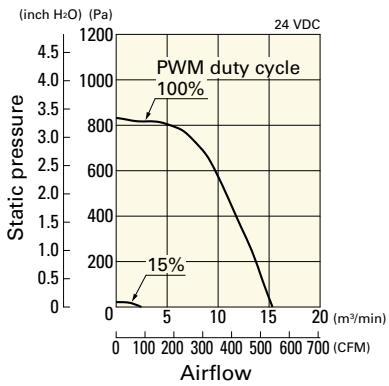

Operating voltage range

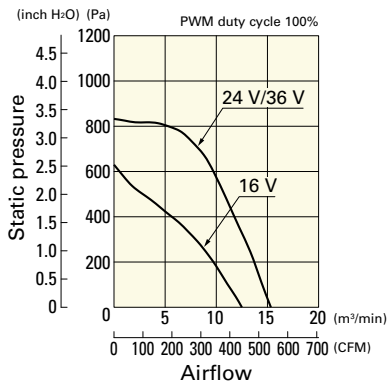

PWM duty - Speed characteristics example

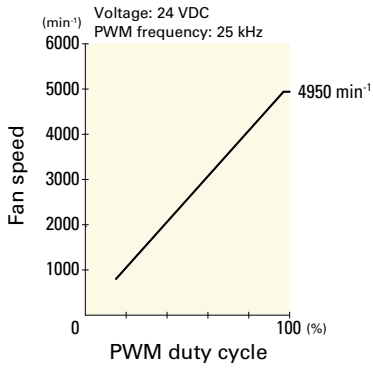

Airflow - Static Pressure Characteristics / PWM Duty - Speed Characteristics Example

9TGA48P0G001 With pulse sensor with PWM control function

PWM duty cycle

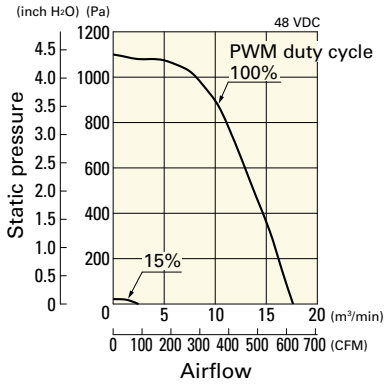

Operating voltage range

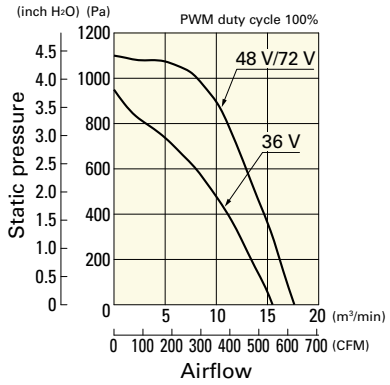

PWM duty - Speed characteristics example

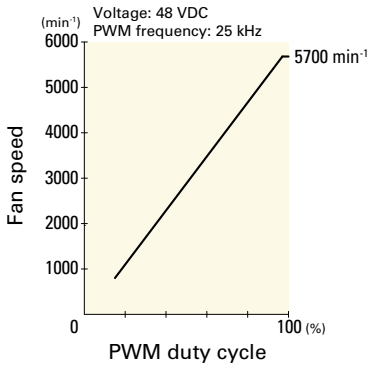

Dimensions (unit: mm)

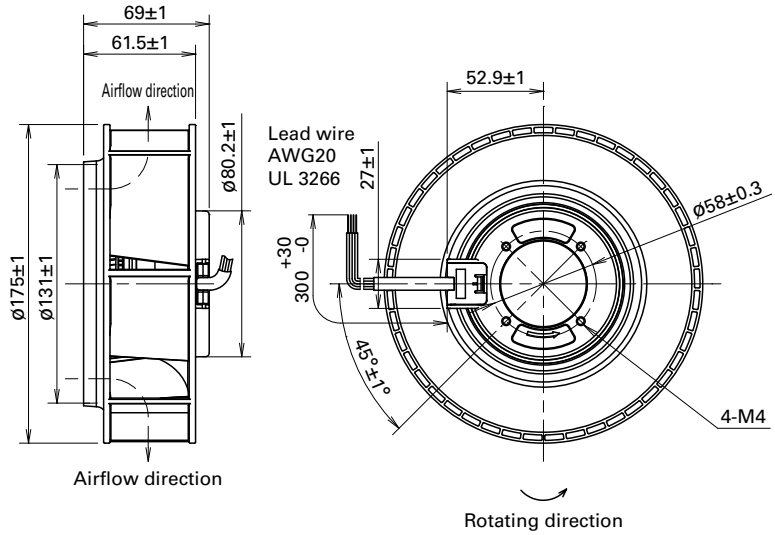

Reference Dimensions of Mounting Holes and Vent Opening (unit: mm)

Fan side

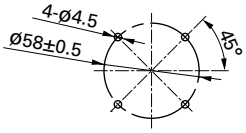

Inlet nozzle side

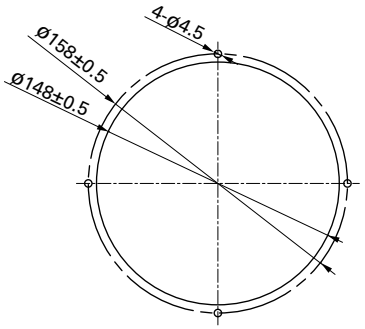

Reference Diagram for Mounting (unit: mm)

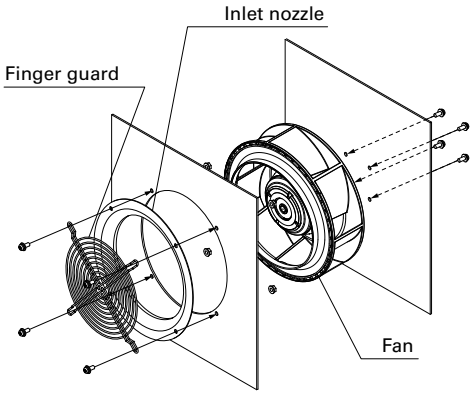

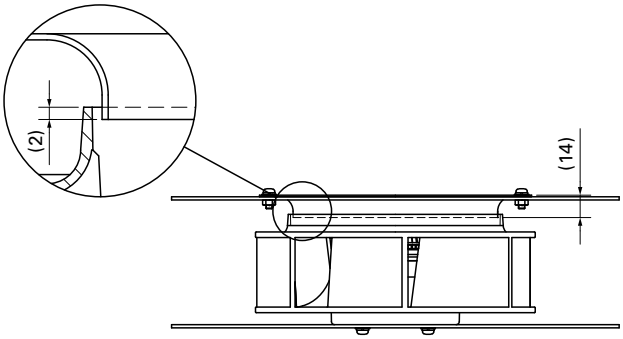

Bolt length: 6 mm max.

Options

Finger guards	page: p. 565

Model no.: 109-722, 109-722H

Inlet nozzle	page: p. 569

Model no.: 109-1073, 109-1073H

ø175×69 mm

San Ace C175 9TG type

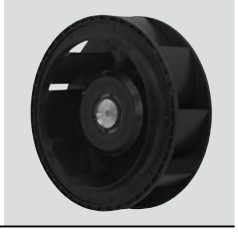

General Specifications

- Material ..... Motor case: Aluminum (Black coating), Impeller: Plastic (Flammability: UL 94V-0)
- Expected life ..... See the table below. (L10 life: 90% survival rate for continuous operation in free air at 60˚C, rated voltage) Expected life at 40°C is for reference only.
- Motor protection function ..... Locked rotor burnout protection, Reverse polarity protection For details, please refer to p. 580.
- Dielectric strength ..... 50/60 Hz, 500 VAC, for 1 minute (between lead wire conductors and motor case)
- Insulation resistance ..... 10 MΩ min. at 500 VDC (between lead wire conductors and motor case)
- Sound pressure level (SPL) ..... A-weighted sound pressure level (SPL) at 1 m away from the air inlet.
- Storage temperature ..... -30 to +70˚C (Non-condensing)
- Lead wire ..... ⊕Red ⊖Black Sensor Yellow Control Brown
- Mass ..... 750 g

Specifications

When the optional inlet nozzle (109-1073) is mounted.

The models listed below **have pulse sensors with PWM control function.**

Model no.	Rated voltage [V]	Operating voltage range [V]	PWM duty cycle* [%]	Rated current [A]	Rated input [W]	Rated speed [min⁻¹]	Max. airflow [m³/min]	Max. airflow [CFM]	Max. static pressure [Pa]	Max. static pressure [inchH₂O]	SPL [dB (A)]	Operating temperature [˚C]	Expected life [h]
9TG24P0G01	24	20.4 to 27.6	100	3.9	93.6	4700	14.0	494.7	885	3.55	73	-20 to +60	40000/60˚C (70000/40˚C)
9TG24P0S01			100	2.35	56.4	3900	11.6	409.8	609	2.45	69	-20 to +70	
9TG48P0G01	48	36 to 55.2	100	1.95	93.6	4700	14.0	494.7	885	3.55	73		

* PWM frequency is 25 kHz. Models without ratings for 0% PWM duty cycle have zero speed at 0%. When control terminal is open, speed is the same as at 100% duty cycle.

Note 1: Max input is 130 W at rated voltage.
Note 2: Sensor and control options are available for selection. Refer to the table on p. 617.

Airflow - Static Pressure Characteristics / PWM Duty - Speed Characteristics Example

9TG24P0G01 With pulse sensor with PWM control function

PWM duty cycle

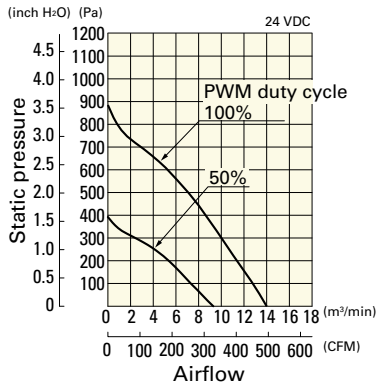

Operating voltage range

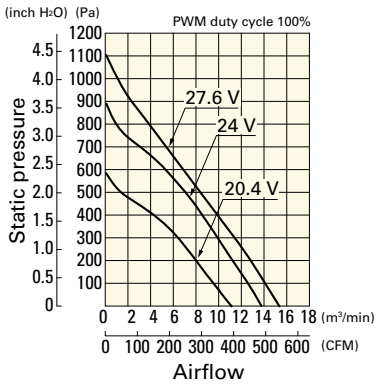

PWM duty - Speed characteristics example

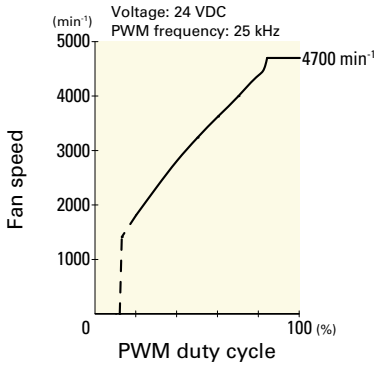

Airflow - Static Pressure Characteristics / PWM Duty - Speed Characteristics Example

9TG24P0S01 With pulse sensor with PWM control function

PWM duty cycle

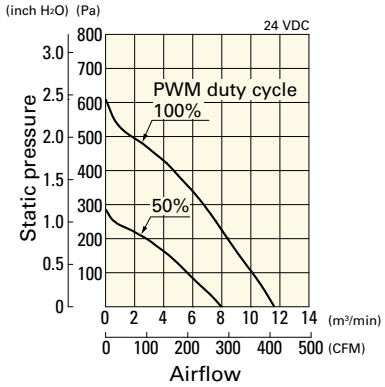

Operating voltage range

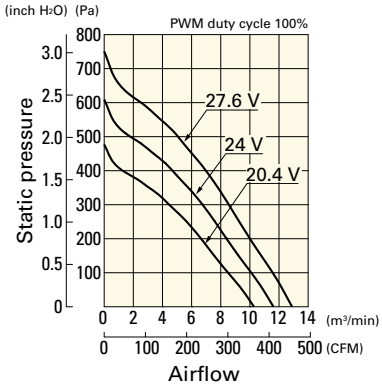

PWM duty - Speed characteristics example

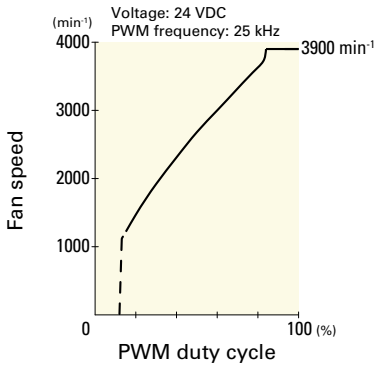

9TG48P0G01 With pulse sensor with PWM control function

PWM duty cycle

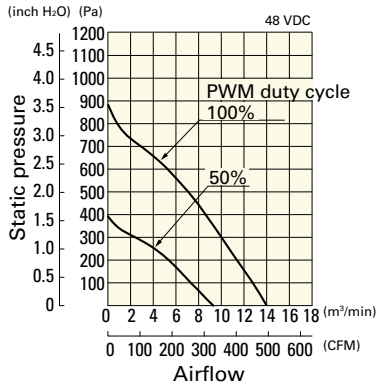

Operating voltage range

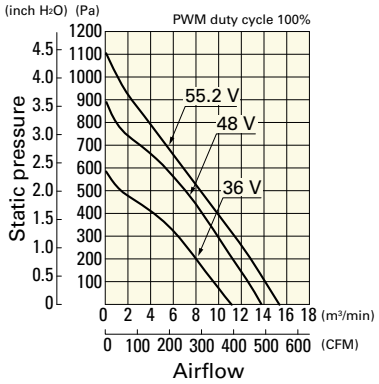

PWM duty - Speed characteristics example

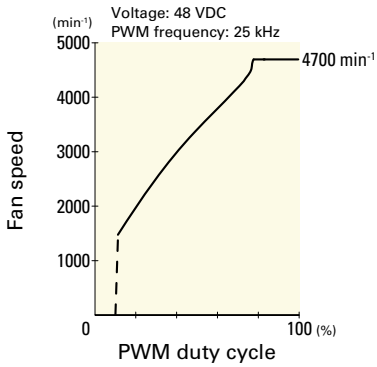

Dimensions (unit: mm)

Lead wire
AWG22 (Model: 9TG24P0G01)
AWG24 (Model: 9TG24P0S01, 9TG48P0G01)
UL 1430

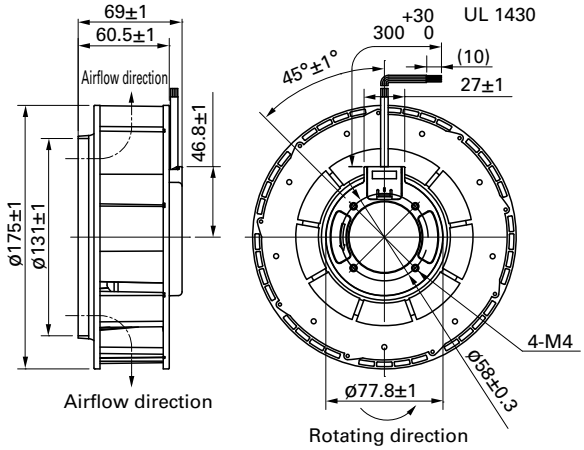

DC

Centrifugal Fan ø175 mm

Reference Dimensions of Mounting Holes and Vent Opening (unit: mm)

Fan side

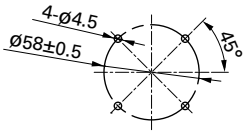

Inlet nozzle side

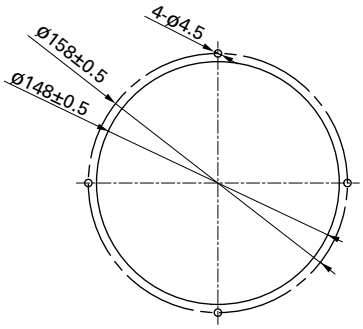

Reference Diagram for Mounting (unit: mm)

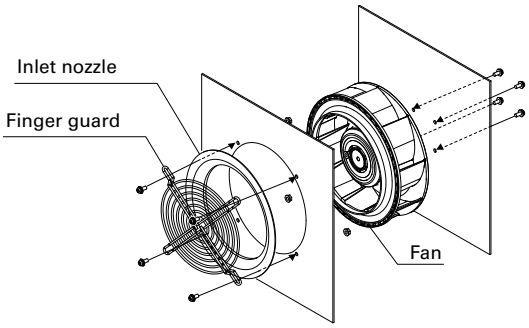

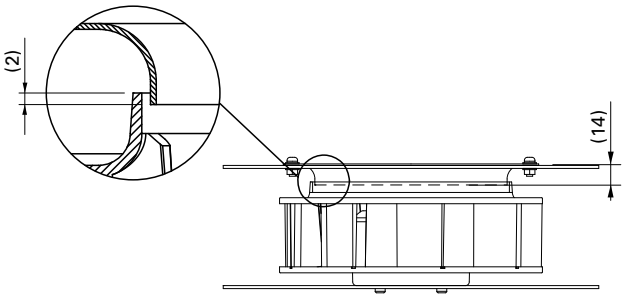

Bolt length: 4 to 6 mm.
To prevent bolts from loosening, use plain washers and spring washers.

Options

Finger guards	page: p. 565
Model no.: 109-722, 109-722H	

Inlet nozzle	page: p. 569
Model no.: 109-1073, 109-1073H	

ø221×71 mm

San Ace C221 9TP type

General Specifications

- Material ..... Motor case: Aluminum (Black coating), Impeller: Plastic (Flammability: UL 94V-0)
- Expected life ..... See the table below. (L10 life: 90% survival rate for continuous operation in free air at 60˚C, rated voltage) Expected life at 40°C is for reference only.
- Motor protection function ..... Locked rotor burnout protection, Reverse polarity protection For details, please refer to p. 580.
- Dielectric strength ..... 50/60 Hz, 500 VAC, for 1 minute (between lead wire conductors and motor case)
- Insulation resistance ..... 10 MΩ min. at 500 VDC (between lead wire conductors and motor case)
- Sound pressure level (SPL) ..... A-weighted sound pressure level (SPL) at 1 m away from the air inlet.
- Storage temperature ..... -30 to +70˚C (Non-condensing)
- Lead wire ..... ⊕Red ⊖Black Sensor Yellow Control Brown
- Mass ..... 1050 g

Specifications

When the optional inlet nozzle (109-1135) is mounted.

The models listed below **have pulse sensors with PWM control function.**

Model no.	Rated voltage [V]	Operating voltage range [V]	PWM duty cycle* [%]	Rated current [A]	Rated input [W]	Rated speed [min⁻¹]	Max. airflow [m³/min]	Max. airflow [CFM]	Max. static pressure [Pa]	Max. static pressure [inchH₂O]	SPL [dB (A)]	Operating temperature [˚C]	Expected life [h]
9TP24P0H001	24	16 to 36	100	3.2	76.8	3050	17.6	622	530	2.13	71	-20 to +70	40000/60˚C (70000/40˚C)
			15	0.4	9.6	1000	5.75	203	57.4	0.23	53		
9TP48P0G001	48	36 to 72	100	2.75	132	3650	21	742	760	3.05	74	-20 to +60	
			15	0.2	9.6	1000	5.75	203	57.4	0.23	53		
9TP48P0H001			100	1.6	76.8	3050	17.6	622	530	2.13	71	-20 to +70	
			15	0.2	9.6	1000	5.75	203	57.4	0.23	53		

* PWM frequency is 25 kHz. Models without ratings for 0% PWM duty cycle have zero speed at 0%. When control terminal is open, speed is the same as at 100% duty cycle.

Note 1: Max input of 9TP48P0G001: 280 W, 9TP24P0H001/9TP48P0H001: 160 W at rated voltage.
Note 2: Sensor and control options are available for selection. Refer to the table on p. 617.
Note 3: The » mark indicates Short LeadTime Service applicable models. See p. 630 for details.

Airflow - Static Pressure Characteristics / PWM Duty - Speed Characteristics Example

9TP24P0H001 With pulse sensor with PWM control function

PWM duty cycle

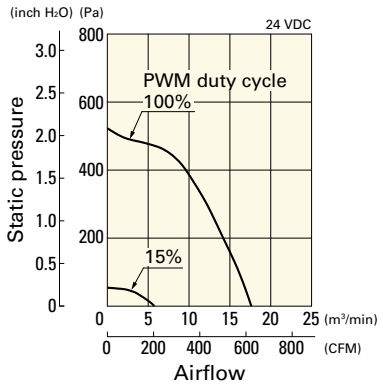

Operating voltage range

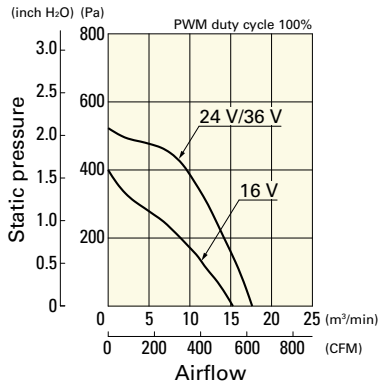

PWM duty - Speed characteristics example

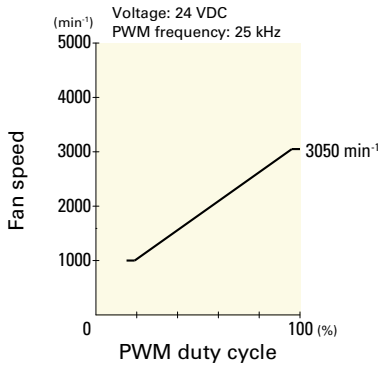

Airflow - Static Pressure Characteristics / PWM Duty - Speed Characteristics Example

9TP48P0G001 With pulse sensor with PWM control function

PWM duty cycle

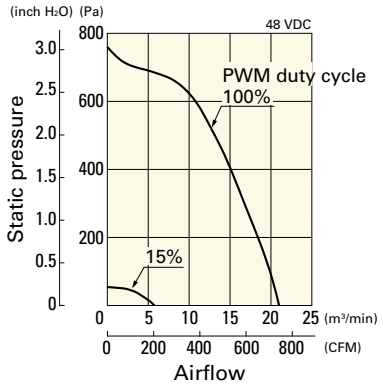

Operating voltage range

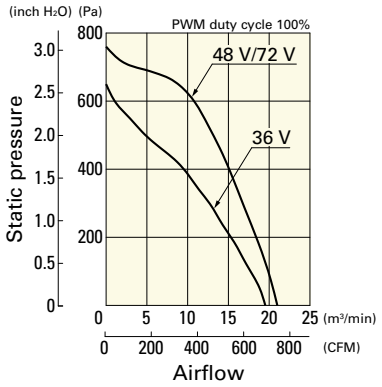

PWM duty - Speed characteristics example

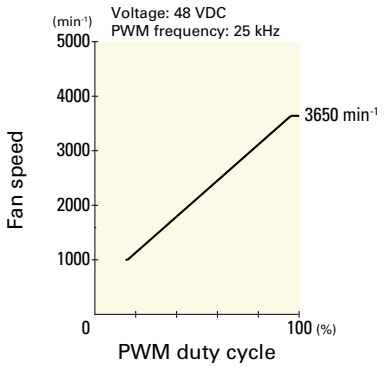

9TP48P0H001 With pulse sensor with PWM control function

PWM duty cycle

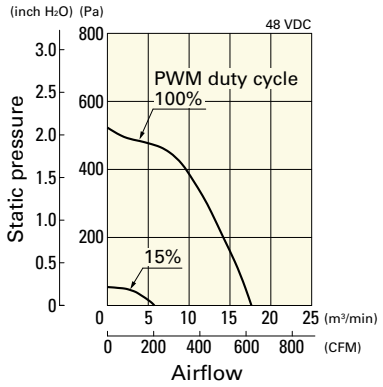

Operating voltage range

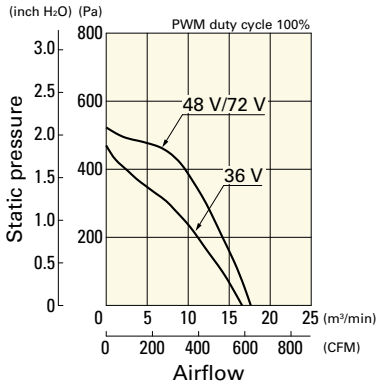

PWM duty - Speed characteristics example

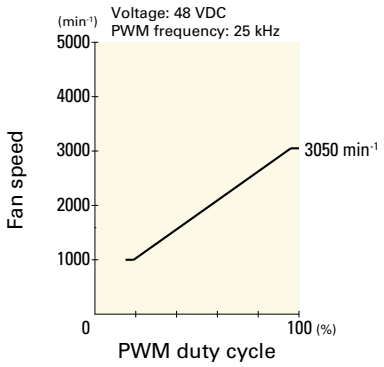

Dimensions (unit: mm)

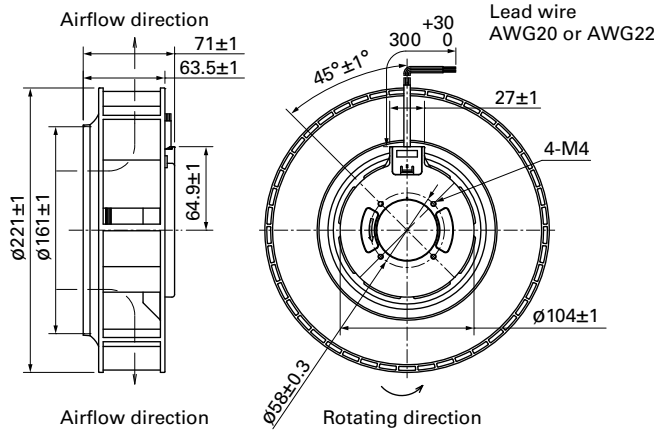

Reference Dimensions of Mounting Holes and Vent Opening (unit: mm)

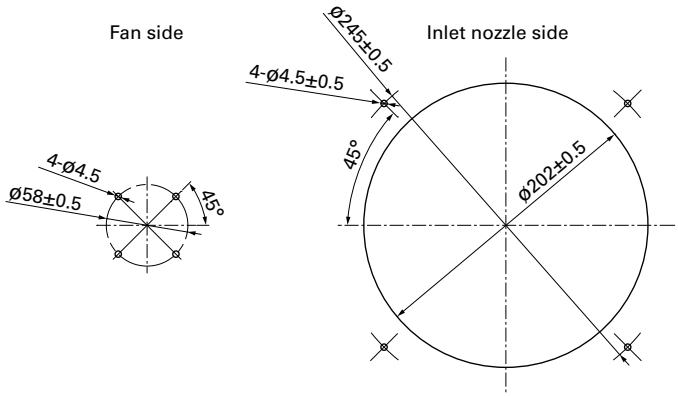

Reference Diagram for Mounting (unit: mm) Bracket-mounted model of this fan is available. For details, refer to pp. 447 to 449.

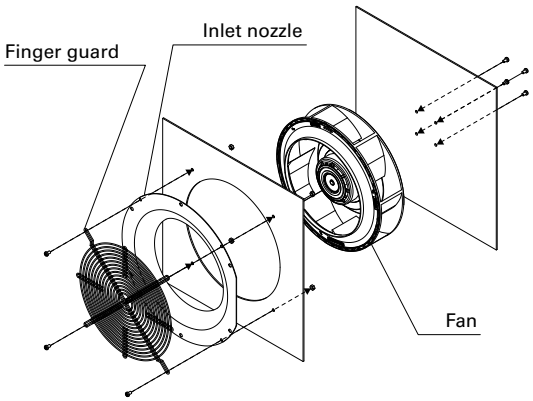

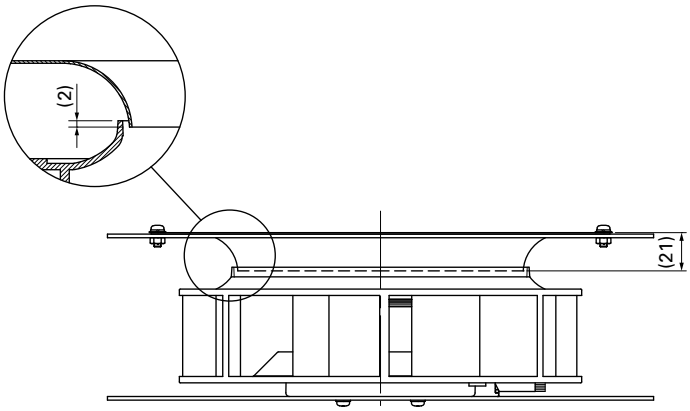

Bolt length: 6 mm max.

Options

Finger guards	page: p. 567

Model no.: 109-1138, 109-1138H

Inlet nozzle	page: p. 569

Model no.: 109-1135, 109-1135H

ø225×99 mm

San Ace C225 9TS type

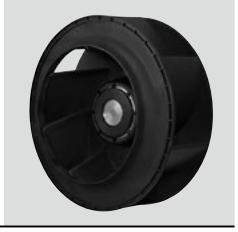

General Specifications

- Material ..... Motor case: Aluminum (Black coating), Impeller: Plastic (Flammability: UL 94V-0)
- Expected life ..... See the table below. (L10 life: 90% survival rate for continuous operation in free air at 60˚C, rated voltage) Expected life at 40°C is for reference only.
- Motor protection function ..... Locked rotor burnout protection, Reverse polarity protection For details, please refer to p. 580.
- Dielectric strength ..... 50/60 Hz, 500 VAC, for 1 minute (between lead wire conductors and motor case)
- Insulation resistance ..... 10 MΩ min. at 500 VDC (between lead wire conductors and motor case)
- Sound pressure level (SPL) ..... A-weighted sound pressure level (SPL) at 1 m away from the air inlet.
- Storage temperature ..... -30 to +70˚C (Non-condensing)
- Lead wire ..... ⊕Red ⊖Black Sensor Yellow Control Brown
- Mass ..... 1220 g

Specifications

When the optional inlet nozzle (109-1134) is mounted.

The models listed below **have pulse sensors with PWM control function.**

Model no.	Rated voltage [V]	Operating voltage range [V]	PWM duty cycle* [%]	Rated current [A]	Rated input [W]	Rated speed [min⁻¹]	Max. airflow [m³/min]	Max. airflow [CFM]	Max. static pressure [Pa]	Max. static pressure [inchH₂O]	SPL [dB (A)]	Operating temperature [˚C]	Expected life [h]
9TS48P0G001	48	36 to 72	100	3.65	175.2	3550	28.1	992	861	3.46	74.5	-20 to +60	40000/60˚C (70000/40˚C)
			15	0.24	11.5	1000	7.85	277	68.5	0.28	52.0		
9TS48P0H001			100	2.08	99.8	2900	22.7	802	590	2.37	70.5	-20 to +70	
			15	0.24	11.5	1000	7.85	277	68.5	0.28	52.0		

* PWM frequency is 25 kHz. Models without ratings for 0% PWM duty cycle have zero speed at 0%. When control terminal is open, speed is the same as at 100% duty cycle.

Note 1: Max input of 9TS48P0G001: 380 W, 9TS48P0H001: 200 W at rated voltage.
Note 2: The » mark indicates Short Lead Time Service applicable models. See p. 630 for details.

Airflow - Static Pressure Characteristics / PWM Duty - Speed Characteristics Example

9TS48P0G001 With pulse sensor with PWM control function

PWM duty cycle

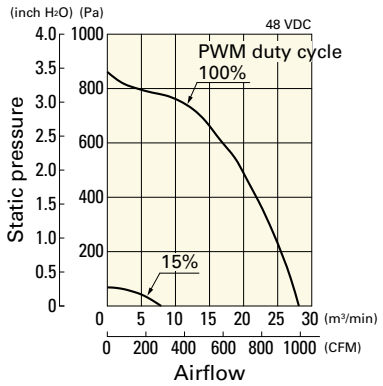

Operating voltage range

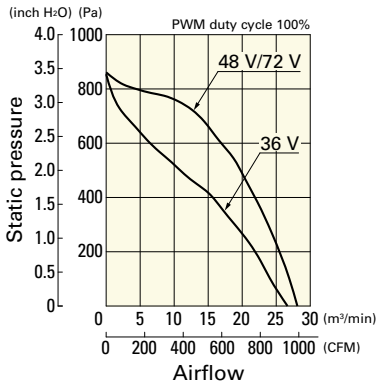

PWM duty - Speed characteristics example

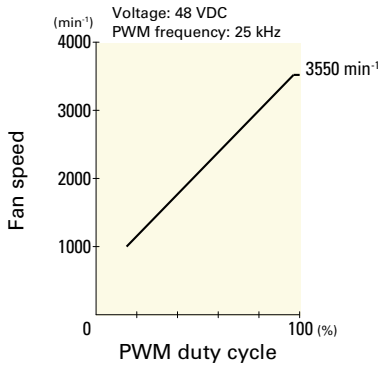

Airflow - Static Pressure Characteristics / PWM Duty - Speed Characteristics Example

9TS48P0H001 With pulse sensor with PWM control function

PWM duty cycle

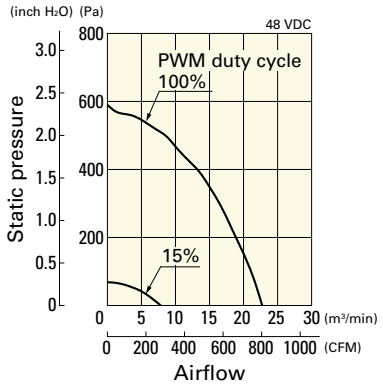

Operating voltage range

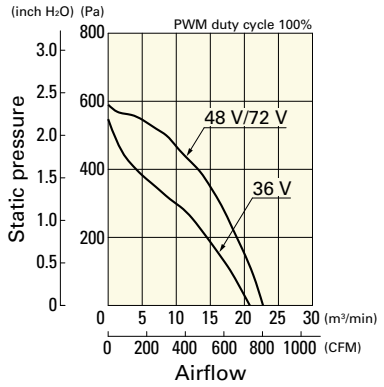

PWM duty - Speed characteristics example

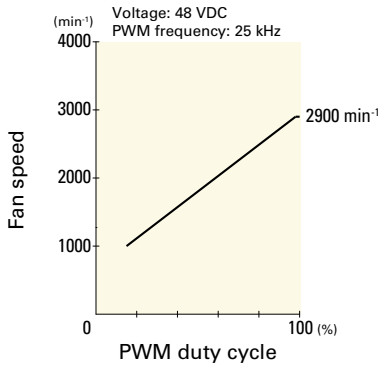

Dimensions (unit: mm)

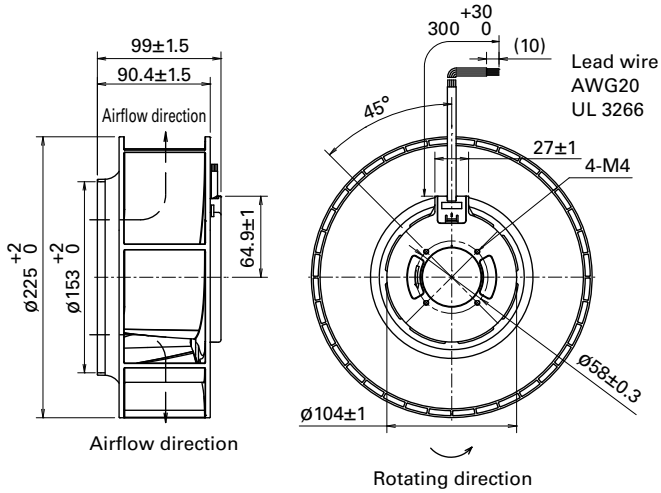

Reference Dimensions of Mounting Holes and Vent Opening (unit: mm)

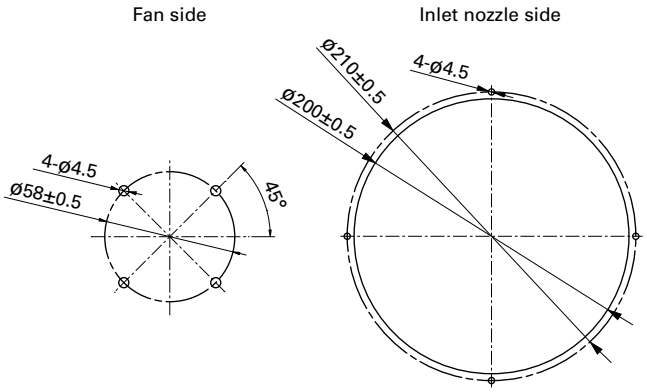

Reference Diagram for Mounting (unit: mm) Bracket-mounted model of this fan is available. For details, refer to pp. 450 to 452.

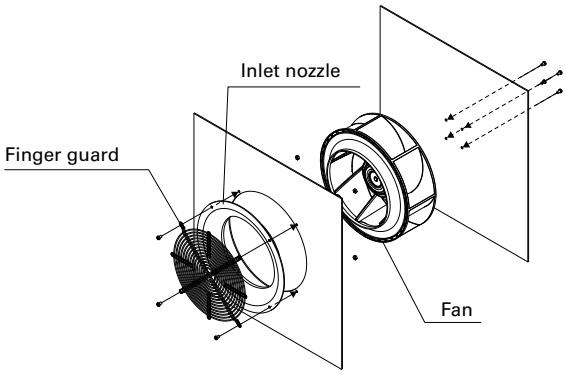

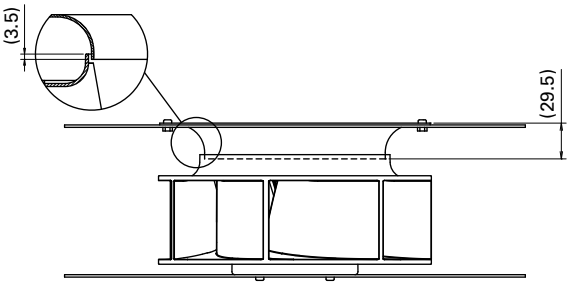

Bolt length: 6 mm max.

Options

Finger guards	page: p. 567

Model no.: 109-1137, 109-1137H

Inlet nozzle	page: p. 569

Model no.: 109-1134, 109-1134H

270×270×99 mm

San Ace C221 9B1TP type

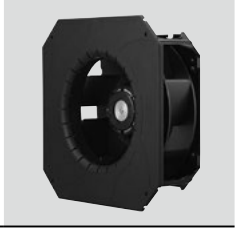

General Specifications

- Material ..... Motor case: Aluminum (Black coating), Impeller: Plastic (Flammability: UL 94V-0)
  Bracket: Aluminum, Plastic (Flammability: UL 94V-0)
- Expected life ..... See the table below. (L10 life: 90% survival rate for continuous operation in free air at 60˚C, rated voltage)
  Expected life at 40°C is for reference only.
- Motor protection function ..... Locked rotor burnout protection, Reverse polarity protection
  For details, please refer to p. 580.
- Dielectric strength ..... 50/60 Hz, 500 VAC, for 1 minute (between lead wire conductors and bracket)
- Insulation resistance ..... 10 MΩ min. at 500 VDC (between lead wire conductors and bracket)
- Sound pressure level (SPL) ..... A-weighted sound pressure level (SPL) at 1 m away from the air inlet.
- Storage temperature ..... -30 to +70˚C (Non-condensing)
- Lead wire ..... ⊕Red ⊖Black Sensor Yellow Control Brown
- Mass ..... 1700 g

Specifications

The models listed below **have pulse sensors with PWM control function.**

Model no.	Rated voltage [V]	Operating voltage range [V]	PWM duty cycle* [%]	Rated current [A]	Rated input [W]	Rated speed [min⁻¹]	Max. airflow [m³/min]	Max. airflow [CFM]	Max. static pressure [Pa]	Max. static pressure [inchH₂O]	SPL [dB (A)]	Operating temperature [˚C]	Expected life [h]
9B1TP24P0H001	24	16 to 36	100	3.2	76.8	3050	17.6	622	530	2.13	71	-20 to +70	40000/60˚C (70000/40˚C)
			15	0.4	9.6	1000	5.75	203	57.4	0.23	53		
9B1TP48P0G001	48	36 to 72	100	2.75	132	3650	21.0	742	760	3.05	74	-20 to +60	
			15	0.2	9.6	1000	5.75	203	57.4	0.23	53		
9B1TP48P0H001			100	1.6	76.8	3050	17.6	622	530	2.13	71	-20 to +70	
			15	0.2	9.6	1000	5.75	203	57.4	0.23	53		

* PWM frequency is 25 kHz. Models without ratings for 0% PWM duty cycle have zero speed at 0%. When control terminal is open, speed is the same as at 100% duty cycle.

Note: Max input of 9B1TP24P0H001/9B1TP48P0H001: 160 W, 9B1TP48P0G001: 280 W at rated voltage.

Airflow - Static Pressure Characteristics / PWM Duty - Speed Characteristics Example

9B1TP24P0H001 With pulse sensor with PWM control function

PWM duty cycle

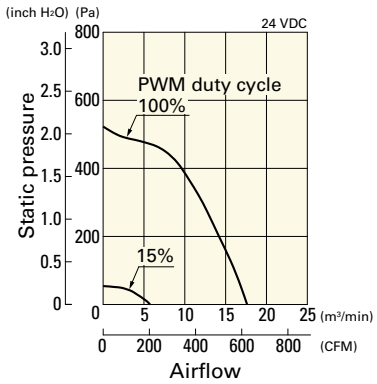

Operating voltage range

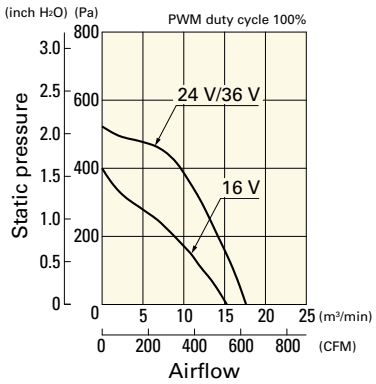

PWM duty - Speed characteristics example

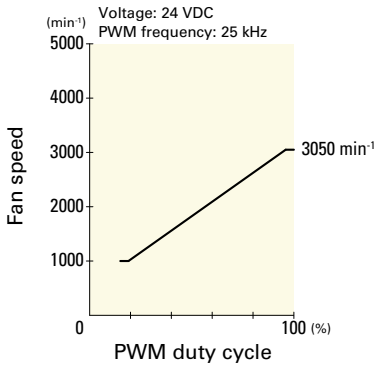

Airflow - Static Pressure Characteristics / PWM Duty - Speed Characteristics Example

9B1TP48P0G001 With pulse sensor with PWM control function

PWM duty cycle

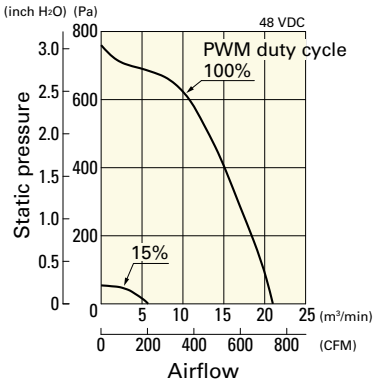

Operating voltage range

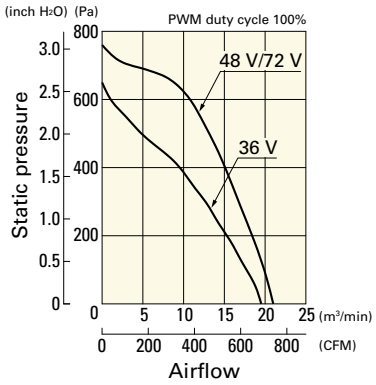

PWM duty - Speed characteristics example

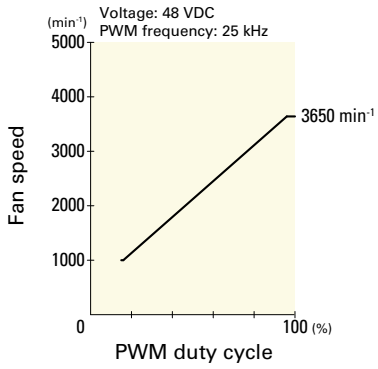

9B1TP48P0H001 With pulse sensor with PWM control function

PWM duty cycle

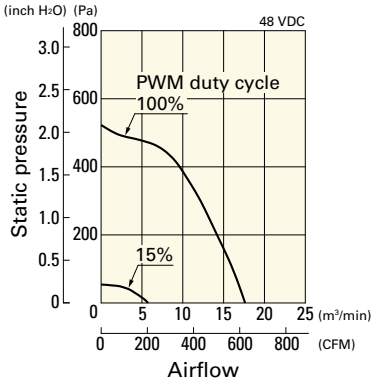

Operating voltage range

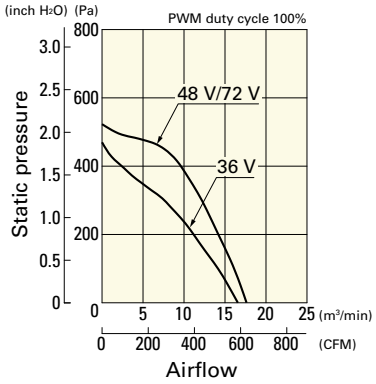

PWM duty - Speed characteristics example

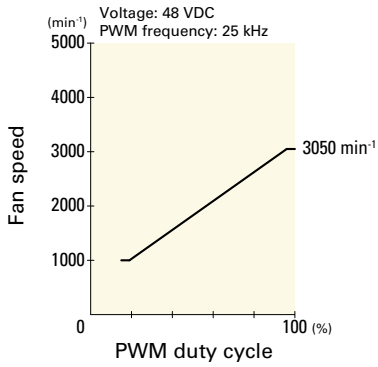

Dimensions (unit: mm)

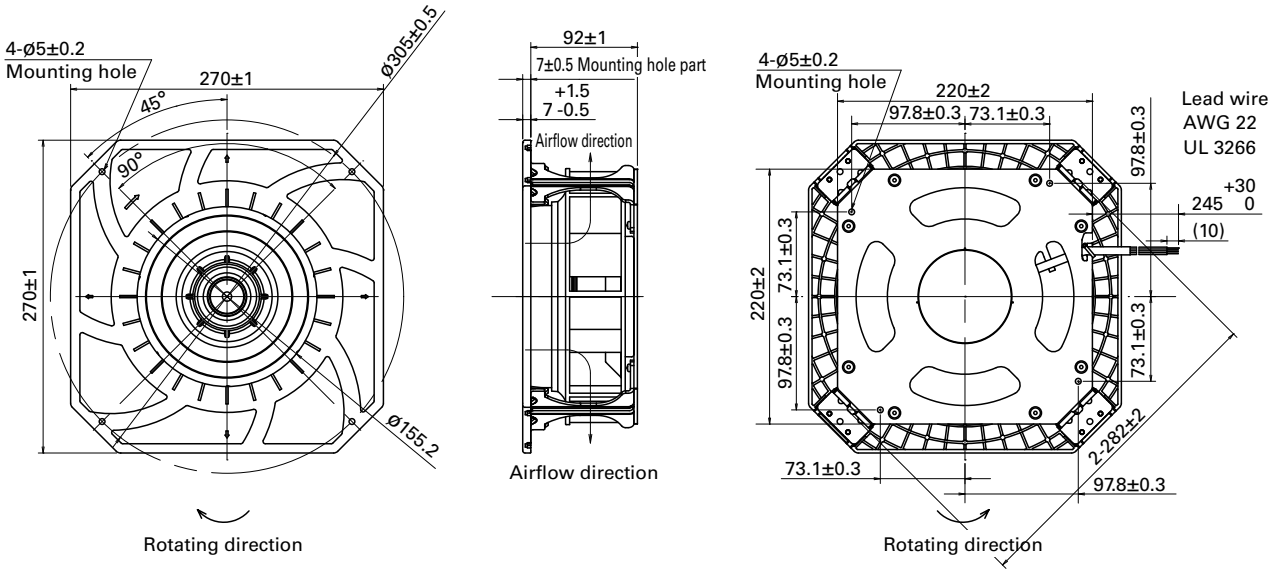

Reference Dimensions of Mounting Holes and Vent Opening (unit: mm)

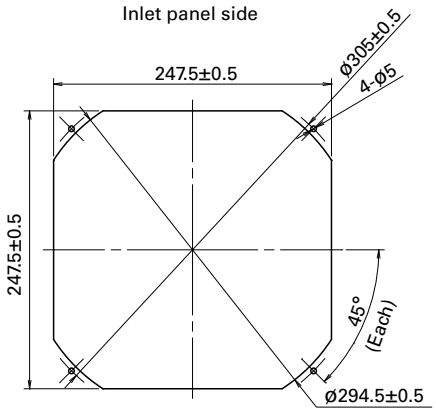

Reference Diagram for Mounting

Finger guard 109-1146 and 109-1146H should be mounted with four holes as in the drawing.

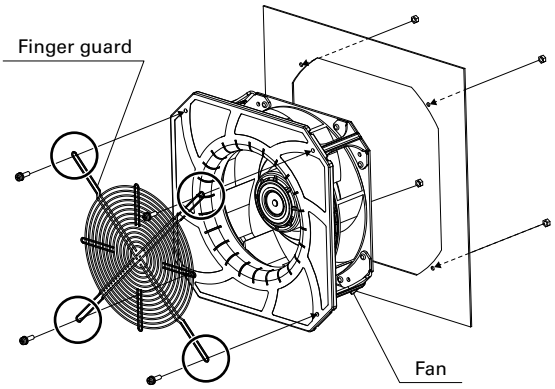

Options

Finger guards page: p. 568

Model no.: 109-1146, 109-1146H

270×270×119 mm

San Ace C225 9B1TS type

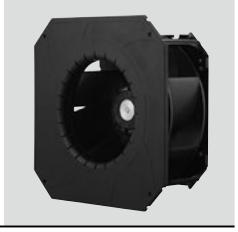

General Specifications

- Material ..... Motor case: Aluminum (Black coating), Impeller: Plastic (Flammability: UL 94V-0)
  Bracket: Aluminum, Plastic (Flammability: UL 94V-0)
- Expected life ..... See the table below. (L10 life: 90% survival rate for continuous operation in free air at 60˚C, rated voltage)
  Expected life at 40°C is for reference only.
- Motor protection function ..... Locked rotor burnout protection, Reverse polarity protection
  For details, please refer to p. 580.
- Dielectric strength ..... 50/60 Hz, 500 VAC, for 1 minute (between lead wire conductors and bracket)
- Insulation resistance ..... 10 MΩ min. at 500 VDC (between lead wire conductors and bracket)
- Sound pressure level (SPL) ..... A-weighted sound pressure level (SPL) at 1 m away from the air inlet.
- Storage temperature ..... -30 to +70˚C (Non-condensing)
- Lead wire ..... ⊕Red ⊖Black Sensor Yellow Control Brown
- Mass ..... 1920 g

Specifications

The models listed below **have pulse sensors with PWM control function.**

Model no.	Rated voltage [V]	Operating voltage range [V]	PWM duty cycle* [%]	Rated current [A]	Rated input [W]	Rated speed [min⁻¹]	Max. airflow [m³/min]	Max. airflow [CFM]	Max. static pressure [Pa]	Max. static pressure [inchH₂O]	SPL [dB (A)]	Operating temperature [˚C]	Expected life [h]
9B1TS48P0G001	48	36 to 72	100	3.65	175.2	3550	28.1	992	861	3.46	74.5	-20 to +60	40000/60˚C (70000/40˚C)
			15	0.24	11.5	1000	7.85	277	68.5	0.28	52.0		
9B1TS48P0H001			100	2.08	99.8	2900	22.7	802	590	2.37	70.5	-20 to +70	
			15	0.24	11.5	1000	7.85	277	68.5	0.28	52.0		

* PWM frequency is 25 kHz. Models without ratings for 0% PWM duty cycle have zero speed at 0%. When control terminal is open, speed is the same as at 100% duty cycle.

Note: Max input of 9B1TS48P0G001: 380 W, 9B1TS48P0H001: 200 W at rated voltage.

Airflow - Static Pressure Characteristics / PWM Duty - Speed Characteristics Example

9B1TS48P0G001 With pulse sensor with PWM control function

PWM duty cycle

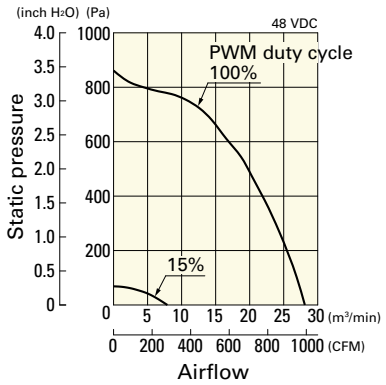

Operating voltage range

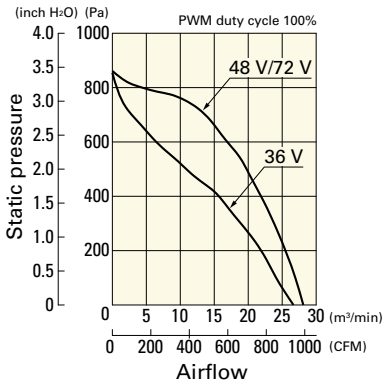

PWM duty - Speed characteristics example

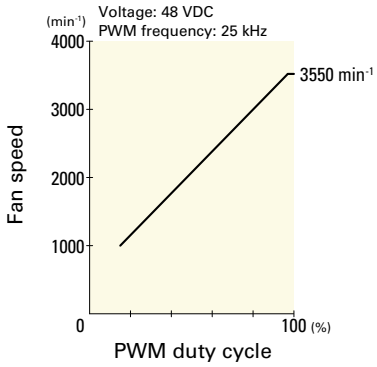

Airflow - Static Pressure Characteristics / PWM Duty - Speed Characteristics Example

9B1TS48P0H001 With pulse sensor with PWM control function

PWM duty cycle

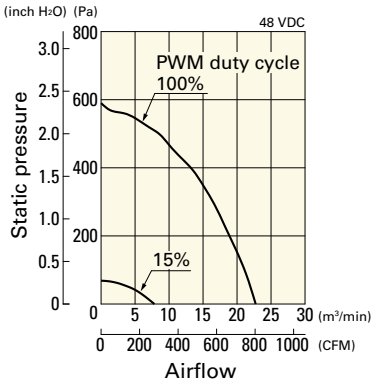

Operating voltage range

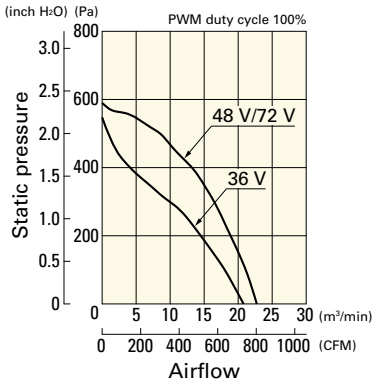

PWM duty - Speed characteristics example

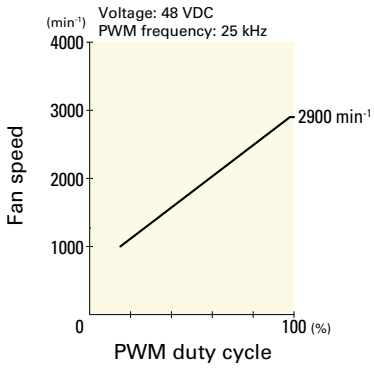

Dimensions (unit: mm)

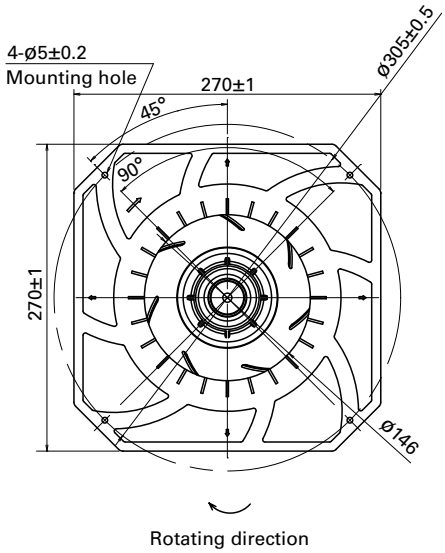

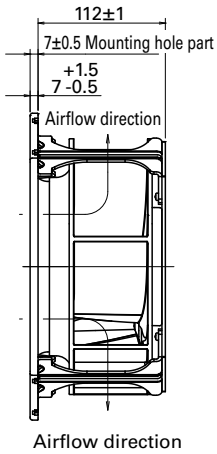

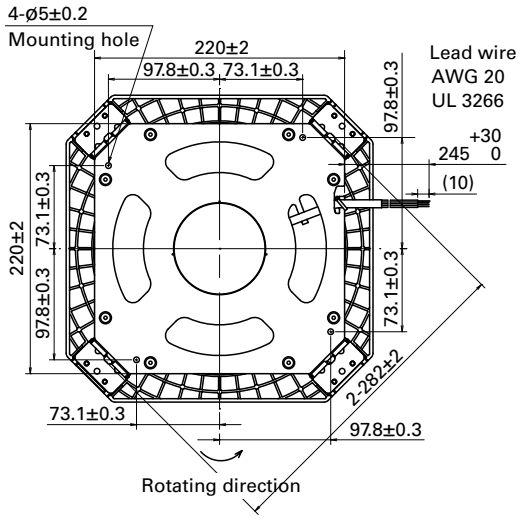

Reference Dimensions of Mounting Holes and Vent Opening (unit: mm)

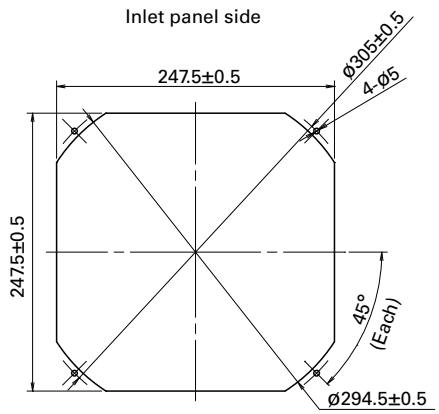

Reference Diagram for Mounting

Finger guard 109-1146 and 109-1146H should be mounted with four holes as in the drawing.

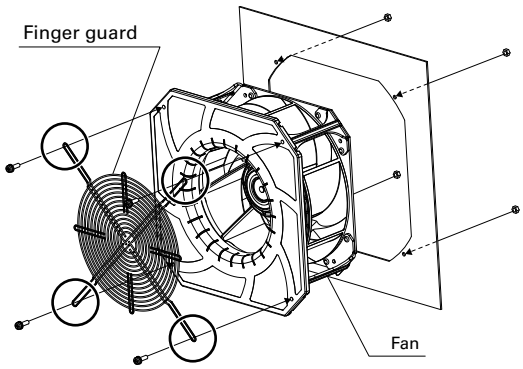

Options

Finger guards page: p. 568

Model no.: 109-1146, 109-1146H